ASSAM POWER GENERATION CORPORATION LIMITED

BIDDING DOCUMENTS

(NATIONAL COMPETITIVE BIDDING)

FOR

ELECTROMECHANICAL AND HYDROMECHANICAL WORKS CONTRACT PACKAGE FOR KARBI LANGPI MIDDLE-II HYDRO POWER PROJECT (24 MW)

(ASSAM, INDIA)

Bid No: KLM-II-HPP/PKG-2

VOLUME-V

DRAWINGS

March 2024

LIST OF DRAWINGS

Hydromechanical Drawings

S NO.	TITLE	DRAWING NUMBER
1	General Arrangement Drawing of Radial Gate for Bay No. 1 to 4	P.020318-TE-H&M-GAD-9551-R0 (2 sheet)
2	General Arrangement Drawing of Radial Gate with flap for Bay no. 5 to 6	P.020318-TE-H&M-GAD-9552-R0 (2 sheet)
3	General Arrangement Drawing of Stoplog for Barrage Gate	P.020318-TE-H&M-GAD-9553-R0 (1 sheet)
4	General Arrangement Drawing of Intake Trash Rack	P.020318-TE-H&M-GAD-9554-R0 (2 sheet)
4	General Arrangement Drawing of Intake Service Gate	P.020318-TE-H&M-GAD-9555-R0
5	General Arrangement Drawing of Intake Emergency Gate	P.020318-TE-H&M-GAD-9556-R0
6	General Arrangement Drawing of Surge Shaft Gate	P.020318-TE-H&M-GAD-9557-R0
7	General Arrangement Drawing of Draft Tube Gate	P.020318-TE-H&M-GAD-9558-R0
8	General Arrangement Drawing of Pressure Shaft	P.020318-TE-H&M-GAD-9559-R0 (2 sheet)

Electromechanical Drawings

1	Power House General Arrangement Equipment layout Plan at 339.00	P.020318-TE-E&M-GAD-9751 Sht 1 of 5
2	Power House General Arrangement Equipment layout Plan at 335.00	P.020318-TE-E&M-GAD-9751 Sht 2 of 5
3	Power House General Arrangement Equipment layout Plan at 317.95	P.020318-TE-E&M-GAD-9751 Sht 3 of 5
4	Power House General Arrangement	P.020318-TE-E&M-GAD-9751 Sht 4 of 5

	Equipment layout Cross section 2-2	
5	Power House General Arrangement Equipment layout Longitudinal Section 1-1	P.020318-TE-E&M-GAD-9751 Sht 5 of 5
6	Cooling Water System Flow Diagram	P.020318-TE-E&M-GAD-9752
7	Drainage and Dewatering System Flow Diagram	P.020318-TE-E&M-GAD-9753
8	Main Single Line Diagram	P.020318-TE-E&M-GAD-9754
9	Main Single Line Diagram Relaying and Metering	P.020318-TE-E&M-GAD-9755
10	Single Line Diagram LTAC/MV System	P.020318-TE-E&M-GAD-9756
11	Single Line Diagram 220V DC	P.020318-TE-E&M-GAD-9757
12	33kV Switchyard Plan & Section	P.020318-TE-E&M-GAD-9758
13	Power House SCADA System Architecture General	P.020318-TE-E&M-GAD-9759 Sht 1 of 3
14	Power House SCADA System Architecture Remote Sites Communication	P.020318-TE-E&M-GAD-9759 Sht 2 of 3
15	Power House SCADA System Architecture Electrical Protection	P.020318-TE-E&M-GAD-9759 Sht 3 of 3

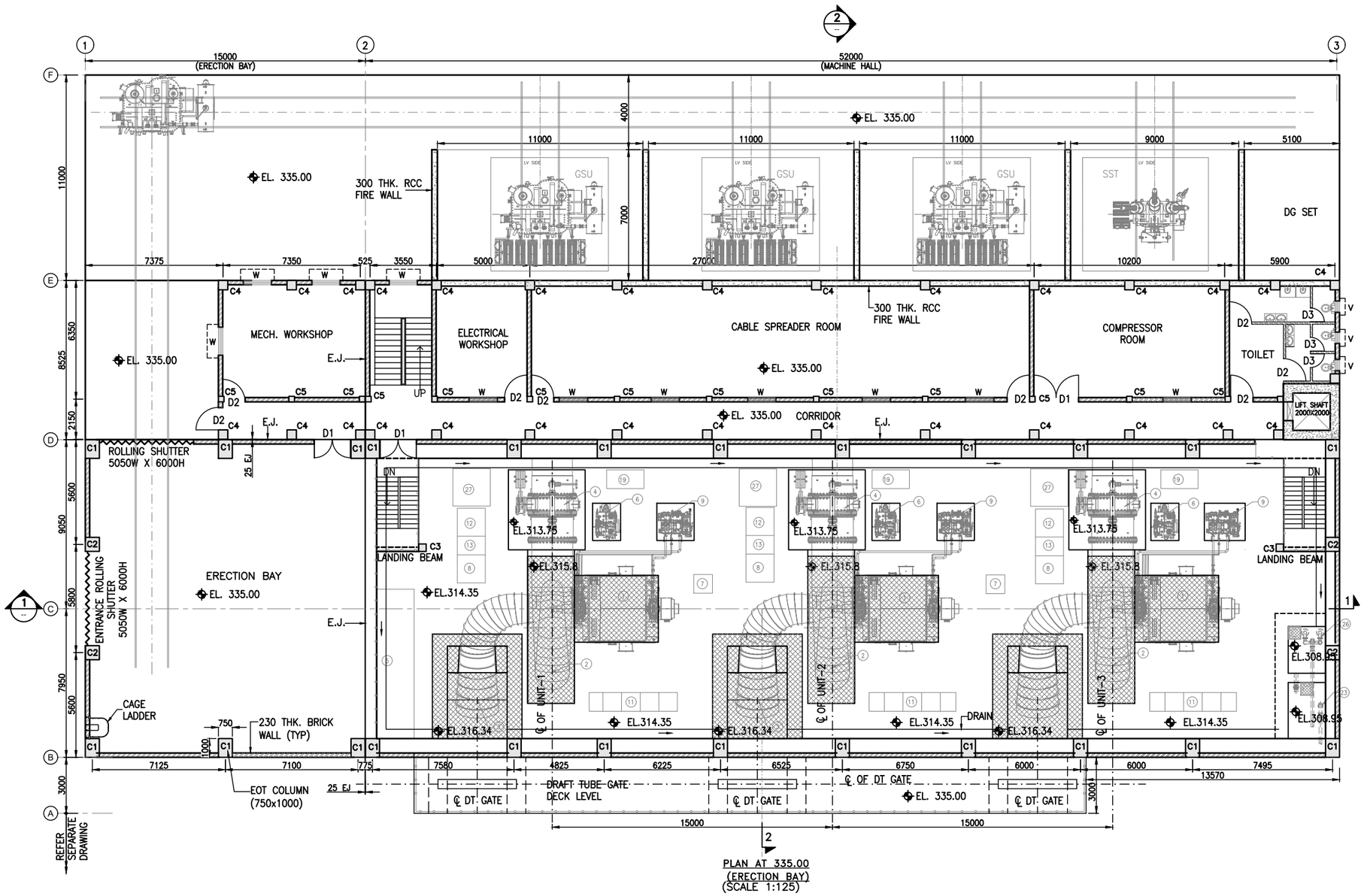

KEY PLAN:-

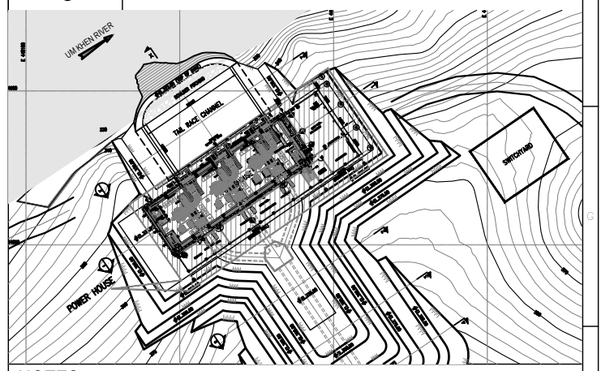

NOTES:

1. ALL DIMENSIONS ARE IN MILLIMETER AND ELEVATIONS ARE IN METERS.
2. NO DIMENSION SHALL BE SCALED FROM THE DRAWING, ONLY WRITTEN DIMENSIONS SHALL BE FOLLOWED.
3. FOR E&M & HM DRAWINGS, REFER SEPARATE DRAWINGS TO ITS RESPECTIVE RELEVANT DRAWINGS.
4. E&M AND H&M EMBEDMENT PARTS SHOWN IN DRAWING ARE INDICATES ONLY & E&M AND H&M EMBEDMENT PARTS SHALL BE PLACED AS PER VENDOR DRAWINGS.
5. THIS DRAWING IS PREPARED BASED ON LATEST E&M DRAWING.
6. FOR RELEVANT DRAWING REFER DRAWING NO:- ----.
7. ALL STRUCTURAL MEMBER OF COLUMNS, BEAMS, DRAINAGE SUMP, RAFT AND WALLS SHALL BE GRADE M25 CONFORMING TO IS:456 2000.
8. THE BACKFILL CONCRETE SHALL BE GRADE M15 CONFORMING TO IS:456 2000.
9. THE SIZE OF TIE BEAMS & COLUMN SHALL BE RE-VERIFIED DURING DESIGN & DETAILING.
10. ANY OVER EXCAVATION SHALL BE FILLED WITH M15 CONCRETE.
11. RAFT, STRUCTURAL ELEMENT OF TIE BEAM, WALL & COLUMNS ARE INDICATIVE ONLY. THE SAME SHALL BE MODIFIED IN CONCRETE OUTLINE DRAWINGS. AFTER DOING STRUCTURE ANALYSIS.
12. LOCAL EXCAVATION SHALL BE DONE FOR LIFT PIT NEAR GRID 3.

BASED ON DRAWING / DOCUMENTS

DRG / DOCUMENT NO.	SUBJECT

REFERENCE DRAWING

DRG. NO.	SUBJECT

SCALE 0 1.25 3.125 6.25 12.5M

DETAIL OF COLUMN

S. No.	DESCRIPTIONS	SIZE	EL.	REMARKS
1.	C1 COLUMN	750X1000	EL.335 TO EL.345	
2.	C2 COLUMN	750X750	EL.335 TO EL.345	
3.	C3 COLUMN	400X400	EL.314.35 TO EL.335	
4.	C4 COLUMN	500X500	EL.335 TO EL.345	
5.	C5 COLUMN	300X300	EL.335 TO EL.345	

DETAILS OF DOORS & WINDOWS

S.NO.	DESCRIPTION	SIZES	NOS.
1.	D1	2400 X 2100	7
2.	D2	1000 X 2100	12
3.	D3	900 X 2100	3
4.	RS	5050 X 6000	2
5.	W	1500 X 1200	24
6.	V	600 X 600	3

LEGENDS:-

- FIRST STAGE CONCRETE M25
- SECOND STAGE CONCRETE M30
- THIRD STAGE CONCRETE M30
- PLUM CONCRETE M15
- BACKFILL
- RCC
- BRICK WALL
- EJ EXPANSION JOINT
- CJ CONTRACTION JOINT
- WS WATERSTOP
- ROCK SURFACE

REV.	DATE	DRAWN	DESIGNED	CHECKED	APPROVED	SUBJECT OF REVISION
0	12-07-2023	HS	AK	HKD	BSS	FOR APPROVAL

OWNER :

ASSAM POWER GENERATION CORPORATION LTD.

PROJECT :

KARBI-LANGPI MIDDLE-II (3X8 MW)
ASSAM, INDIA

TITLE:

POWER HOUSE
GENERAL ARRANGEMENT
PLAN AT EL.335.00

TRACTEBEL ENGIE

TRACTEBEL Engineering pvt. ltd.

Size	Scale	Sheet			Rev.
A1	AS SHOWN	1	OF	9	0

Project No.	Discipline Code	Serial No.
P.020318	TE-E&M-GAD	9751

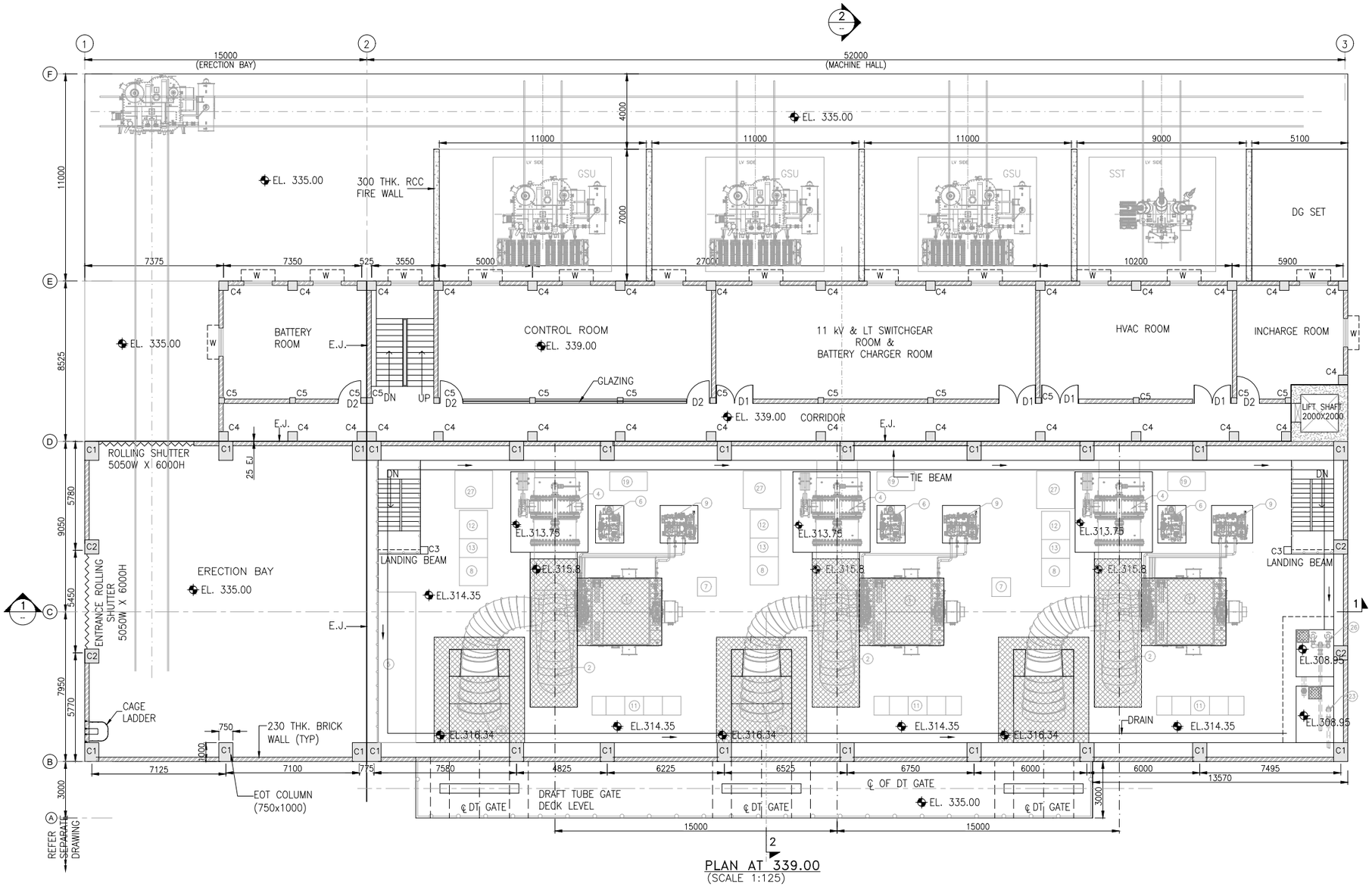

PLAN AT 339.00
(SCALE 1:125)

NOTES:

1. ALL DIMENSIONS ARE IN MILLIMETERS AND ELEVATIONS IN METERS, UNLESS OTHERWISE SPECIFIED.
2. DO NOT MEASURE DIMENSIONS ON THE DRAWING, ONLY WRITTEN DIMENSION SHOULD BE FOLLOWED.
3. FOR OTHER NOTES REFER DRAWING NO:-020318-TE-E&M-GAD-9751 SHEET-1.
4. THE ELEVATION OF E&M EQUIPMENT AT GENERATOR TURBINE FLOOR SHALL VERIFIED WITH E&M EQUIPMENT DETAILS DRAWINGS.

DETAIL OF COLUMN

S. No.	DESCRIPTIONS	SIZE	EL.	REMARKS
1.	C1 COLUMN	750X1000	EL.335 TO EL.345	
2.	C2 COLUMN	750X750	EL.335 TO EL.345	
3.	C3 COLUMN	400X400	EL.314.35 TO EL.335	
4.	C4 COLUMN	500X500	EL.335 TO EL.345	
5.	C5 COLUMN	300X300	EL.335 TO EL.345	

DETAILS OF DOORS & WINDOWS

S.NO.	DESCRIPTION	SIZES	NOS.
1.	D1	2400 X 2100	7
2.	D2	1000 X 2100	12
3.	D3	900 X 2100	3
4.	RS	5050 X 6000	2

LEGENDS:-

- FIRST STAGE CONCRETE M25
- SECOND STAGE CONCRETE M30
- THIRD STAGE CONCRETE M30
- PLUM CONCRETE M15
- BACKFILL
- RCC
- BRICK WALL
- EJ EXPANSION JOINT
- CJ CONTRACTION JOINT
- WS WATERSTOP
- ROCK SURFACE

BASED ON DRAWING / DOCUMENTS

DRG / DOCUMENT NO.	SUBJECT

REFERENCE DRAWING

DRG. NO.	SUBJECT

SCALE 0 1.25 3.125 6.25 12.5M

REV.	DATE	DRAWN	DESIGNED	CHECKED	APPROVED	SUBJECT OF REVISION
0	12-07-2023	HS	AK	HKD	BSS	FOR APPROVAL

OWNER :

ASSAM POWER GENERATION CORPORATION LTD.

PROJECT :

KARBI-LANGPI MIDDLE-II (3X8 MW)
ASSAM, INDIA

TITLE:

POWER HOUSE
GENERAL ARRANGEMENT
PLAN AT EL.339.00

TRACTEBEL ENGIE

TRACTEBEL Engineering pvt. ltd.

Size	Scale	Sheet	Rev.
A1	AS SHOWN	2 OF 9	0

Project No.	Discipline Code	Serial No.
P.020318	TE-E&M-GAD	9751

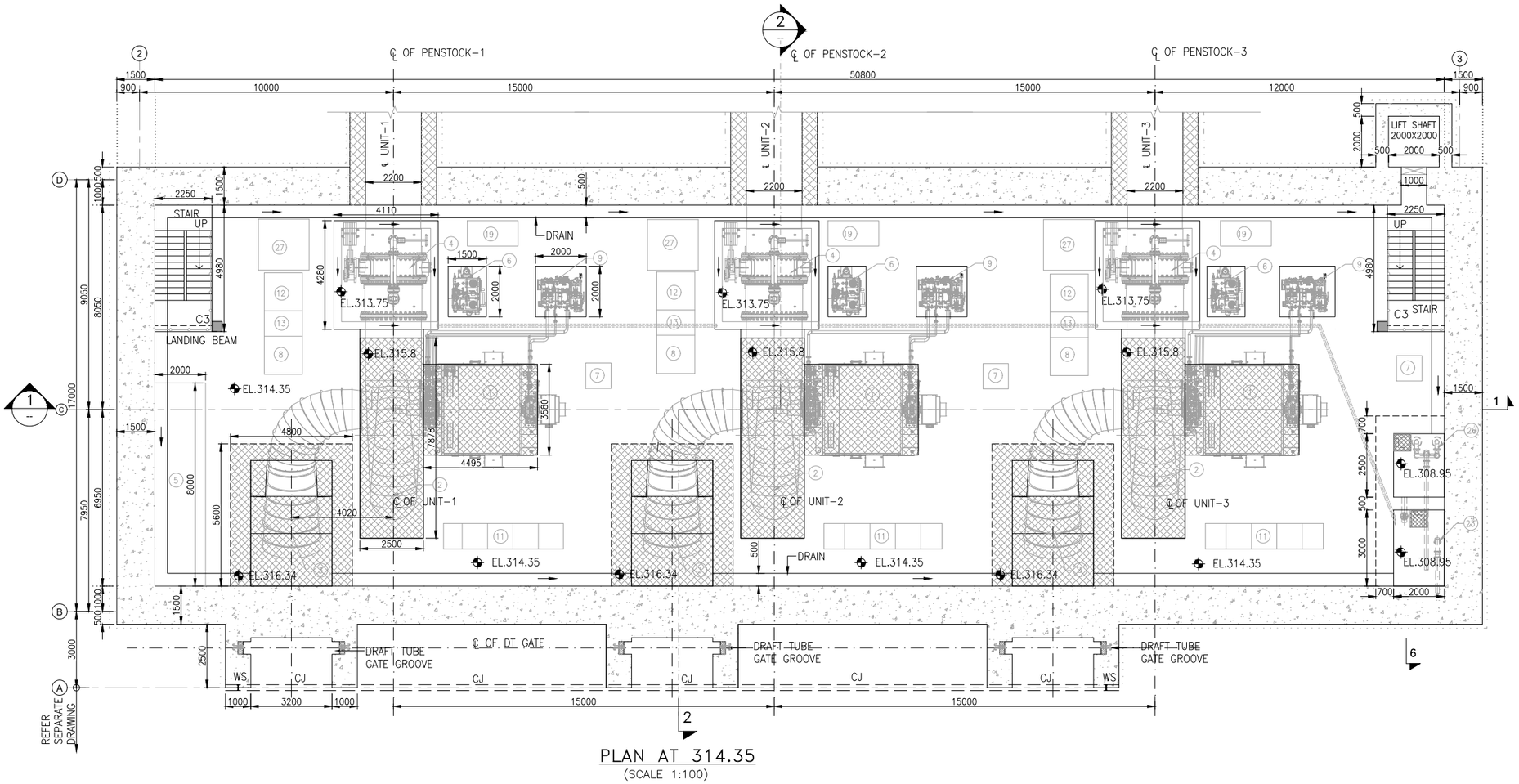

PLAN AT 314.35

(SCALE 1:100)

NOTES:

1. ALL DIMENSIONS ARE IN MILLIMETERS AND ELEVATIONS IN METERS, UNLESS OTHERWISE SPECIFIED.
2. DO NOT MEASURE DIMENSIONS ON THE DRAWING, ONLY WRITTEN DIMENSION SHOULD BE FOLLOWED.
3. FOR OTHER NOTES REFER DRAWING NO:-020318-TE-E&M-GAD-9751 SHEET-1.
4. THE ELEVATION OF E&M EQUIPMENT AT GENERATOR TURBINE FLOOR SHALL VERIFIED WITH E&M EQUIPMENT DETAILS DRAWINGS.

LEGENDS:-

- FIRST STAGE CONCRETE M25
- SECOND STAGE CONCRETE M30
- THIRD STAGE CONCRETE M30
- PLUM CONCRETE M15
- BACKFILL
- RCC
- BRICK WALL
- EJ EXPANSION JOINT
- CJ CONTRACTION JOINT
- WS WATERSTOP

BASED ON DRAWING / DOCUMENTS

DRG / DOCUMENT NO.	SUBJECT

REFERENCE DRAWING

DRG. NO.	SUBJECT

SCALE 0 1.0 2.5 5.0 10.0 M

REV.	DATE	DRAWN	DESIGNED	CHECKED	APPROVED	SUBJECT OF REVISION
0	12-07-2023	HS	AK	HKD	BSS	FOR APPROVAL

OWNER :

ASSAM POWER GENERATION CORPORATION LTD.

PROJECT :

KARBI-LANGPI MIDDLE-II (3X8 MW)
ASSAM, INDIA

TITLE:

POWER HOUSE
GENERAL ARRANGEMENT
PLAN AT EL.314.35

TRACTEBEL ENGIE

TRACTEBEL Engineering pvt. ltd.

Size	Scale	Sheet	Rev.
A1	AS SHOWN	3 OF 9	0

Project No.	Discipline Code	Serial No.
P.020318	TE-E&M-GAD	9751

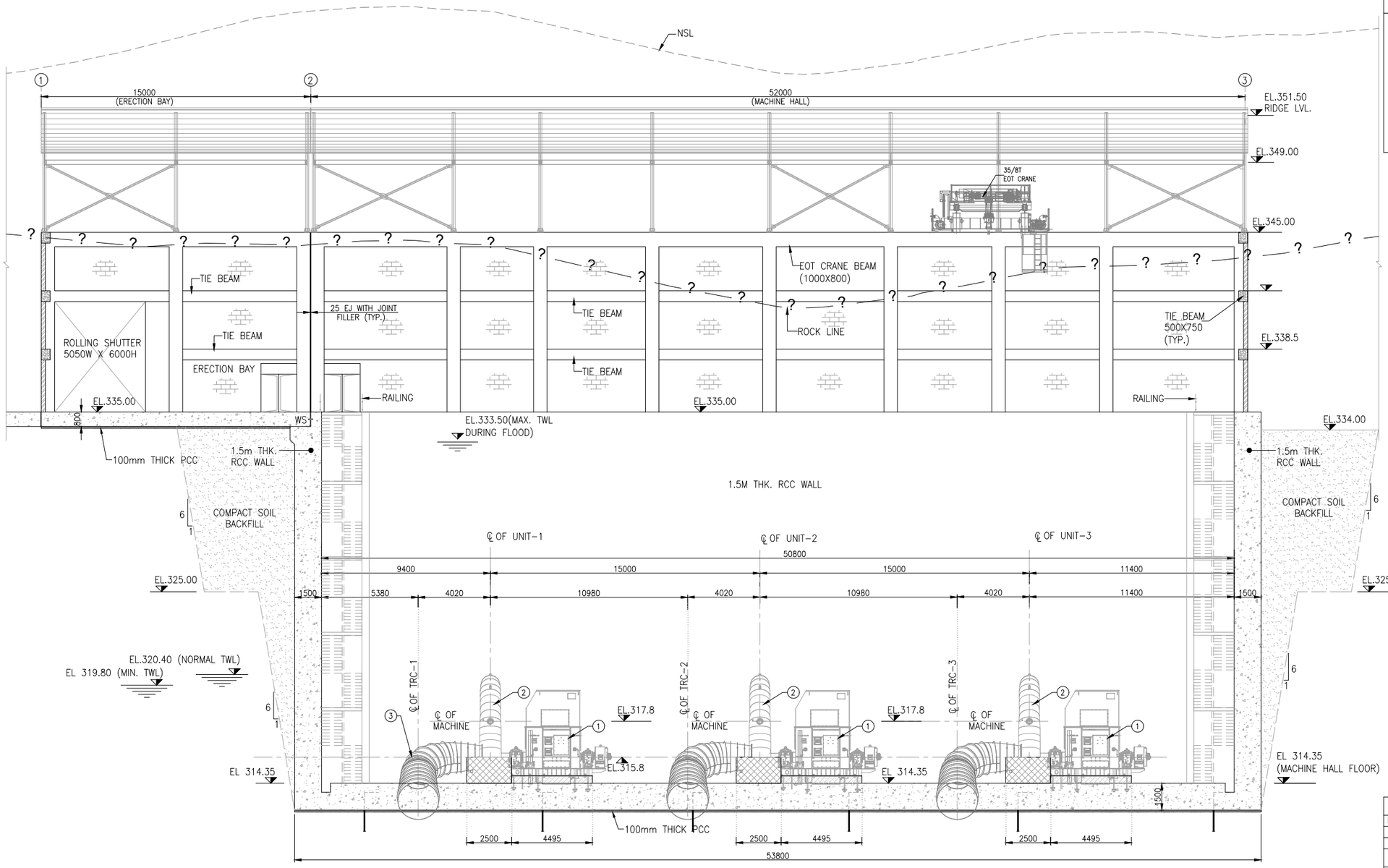

LONGITUDINAL SECTION OF POWER HOUSE
SECTION 1–1
(SCALE 1:125)

NOTES:

1. ALL DIMENSIONS ARE IN MILLIMETERS AND ELEVATIONS IN METERS, UNLESS OTHERWISE SPECIFIED.
2. DO NOT MEASURE DIMENSIONS ON THE DRAWING, ONLY WRITTEN DIMENSION SHOULD BE FOLLOWED.
3. FOR OTHER NOTES REFER DRAWING NO:–020318–TE–E&M–GAD–9751 SHEET–1.
4. THE ELEVATION OF E&M EQUIPMENT AT GENERATOR TURBINE FLOOR SHALL VERIFIED WITH E&M EQUIPMENT DETAILS DRAWINGS.

LEGENDS:–

- FIRST STAGE CONCRETE M25
- SECOND STAGE CONCRETE M30
- THIRD STAGE CONCRETE M30
- PLUM CONCRETE M15
- BACKFILL
- RCC
- BRICK WALL
- EJ EXPANSION JOINT
- CJ CONTRACTION JOINT
- WS WATERSTOP
- ROCK SURFACE

BASED ON DRAWING / DOCUMENTS	
DRG / DOCUMENT NO.	SUBJECT

REFERENCE DRAWING	
DRG. NO.	SUBJECT

SCALE 0 1.25 3.125 6.25 12.5M

REV.	DATE	DRAWN	DESIGNED	CHECKED	APPROVED	SUBJECT OF REVISION
0	12–07–2023	HS	AK	HKD	BSS	FOR APPROVAL

OWNER :

ASSAM POWER GENERATION CORPORATION LTD.

PROJECT :

KARBI-LANGPI MIDDLE-II (3X8 MW)
ASSAM, INDIA

TITLE:

POWER HOUSE
GENERAL ARRANGEMENT
SECTION 1-1

TRACTEBEL ENGIE

TRACTEBEL Engineering pvt. ltd.

Size	Scale	Sheet			Rev.
A1	AS SHOWN	4	OF	5	0

Project No.	Discipline Code	Serial No.
P.020318	TE-E&M-GAD	9751

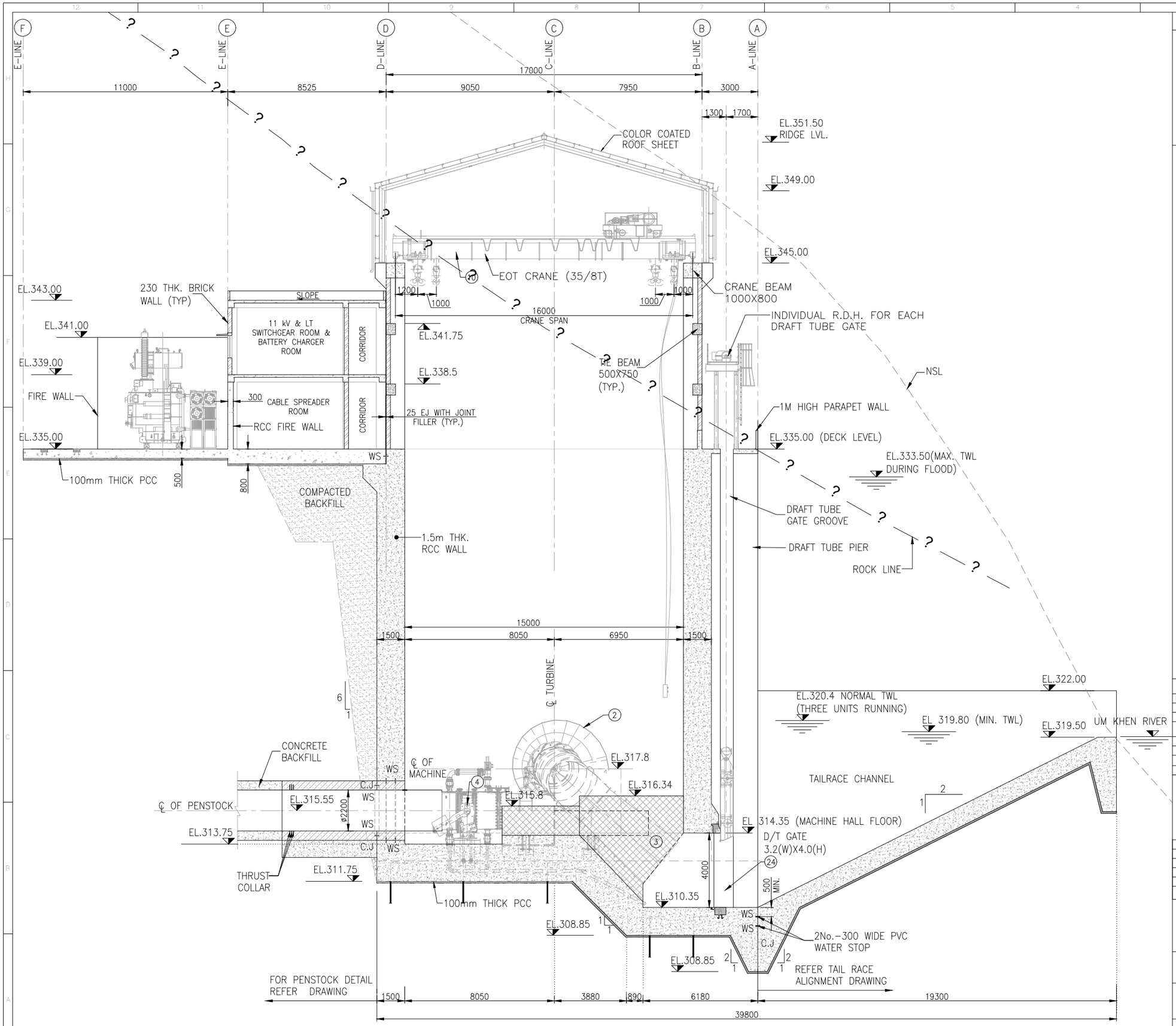

CROSS SECTION 2-2

(SCALE 1:100)

NOTES:

1. ALL DIMENSIONS ARE IN MILLIMETERS AND ELEVATIONS IN METERS, UNLESS OTHERWISE SPECIFIED.
2. DO NOT MEASURE DIMENSIONS ON THE DRAWING, ONLY WRITTEN DIMENSION SHOULD BE FOLLOWED.
3. FOR OTHER NOTES REFER DRAWING NO:-020318-TE-E&M-GAD-9751 SHEET-1.
4. THE ELEVATION OF E&M EQUIPMENT AT GENERATOR TURBINE FLOOR SHALL VERIFIED WITH E&M EQUIPMENT DETAILS DRAWINGS.

LEGENDS:-

- FIRST STAGE CONCRETE M25
- SECOND STAGE CONCRETE M30
- THIRD STAGE CONCRETE M30
- PLUM CONCRETE M15
- BACKFILL
- RCC
- BRICK WALL
- EJ EXPANSION JOINT
- CJ CONTRACTION JOINT
- WS WATERSTOP
- ROCK SURFACE

BASED ON DRAWING / DOCUMENTS

DRG / DOCUMENT NO.	SUBJECT

REFERENCE DRAWING

DRG. NO.	SUBJECT

SCALE 0 1.0 2.5 5.0 10.0 M

REV.	DATE	DRAWN	DESIGNED	CHECKED	APPROVED	SUBJECT OF REVISION
0	12-07-2023	HS	AK	HKD	BSS	FOR APPROVAL

OWNER :

ASSAM POWER GENERATION CORPORATION LTD.

PROJECT :

KARBI-LANGPI MIDDLE-II (3X8 MW)
ASSAM, INDIA

TITLE:

POWER HOUSE
GENERAL ARRANGEMENT
SECTION 2-2

TRACTEBEL ENGIE

TRACTEBEL Engineering pvt. ltd.

Size	Scale	Sheet	Rev.
A1	AS SHOWN	5 OF 5	0

Project No.	Discipline Code	Serial No.
P.020318	TE-E&M-GAD	9751

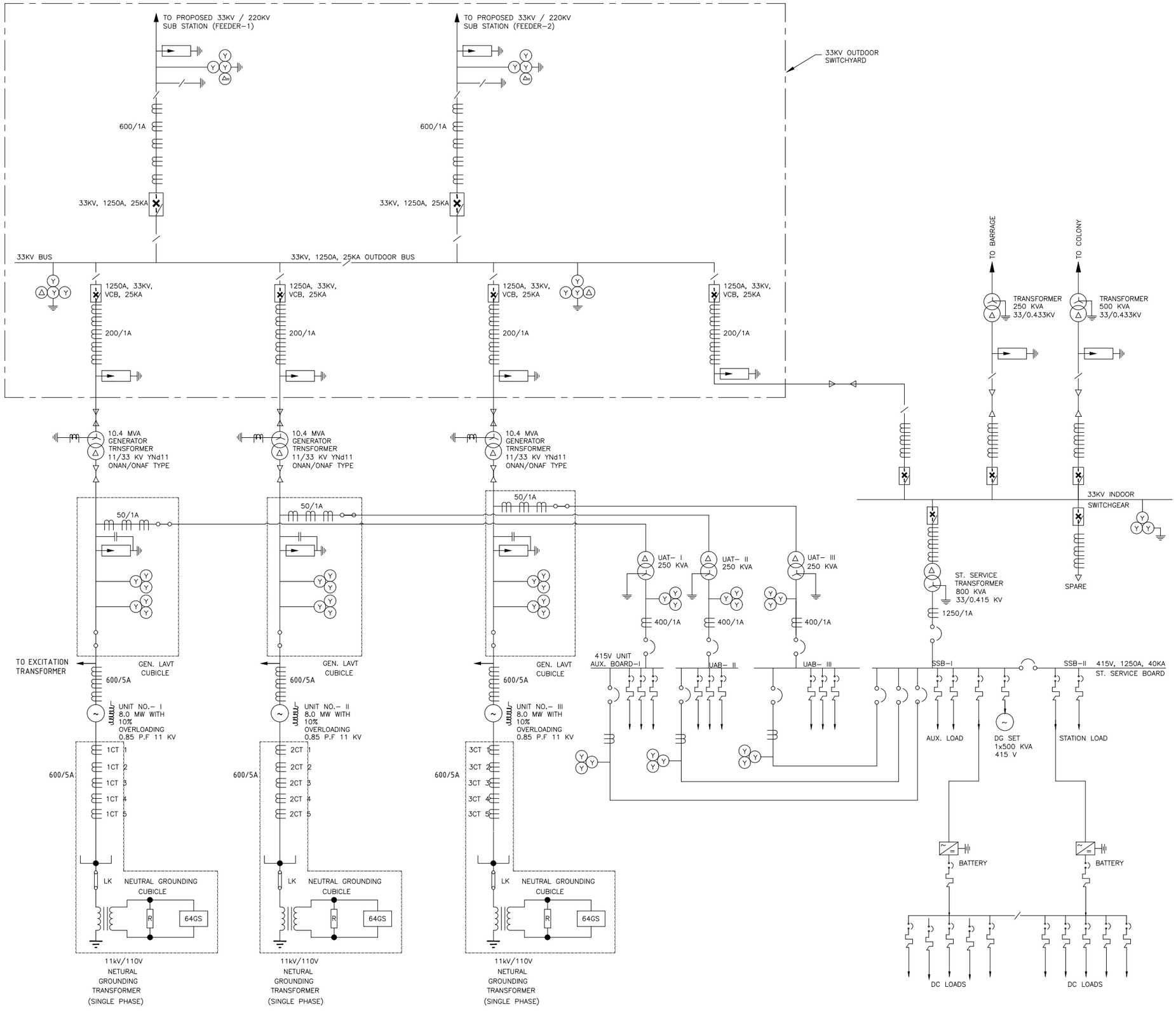

NOTES:

1. THIS DRAWING SHOWS SINGLE LINE DIAGRAM FOR THE PROJECT.

LEGEND:

	MV CIRCUIT BREAKER
	33/11KV XLPE CABLE
	CURRENT TRANSFORMER
	ISOLATOR
	ISOLATER WITH EARTH SWITCH
	VOLTAGE TRANSFORMER
	LIGHTNING ARRESTER
	CAPACITOR
	AIR CIRCUIT BREAKER
	TWO WINDING TRANSFORMER
	DELTA CONNECTED
	WYE CONNECTED
	LINK
	MCCB

FOR TENDER PURPOSE ONLY

DATE :- 08-02-2024

REV.	DATE	DRAWN	DESIGNED	CHECKED	APPROVED	SUBJECT OF REVISION
0	08.02.2024	SL	VRS	HKD	BSS	FOR APPROVAL

OWNER :

ASSAM POWER GENERATION CORPORATION LTD.

PROJECT :

KARBI-LANGPI MIDDLE-II (3X8 MW)
ASSAM, INDIA

TITLE:

MAIN SINGLE LINE DIAGRAM

TRACTEBEL

TRACTEBEL Engineering pvt. ltd.

Size	Scale	Sheet			Rev.
A1	AS SHOWN	1	OF	1	0

Project No.	Discipline Code	Serial No.
P.020318	TE-E&M-GAD	9754

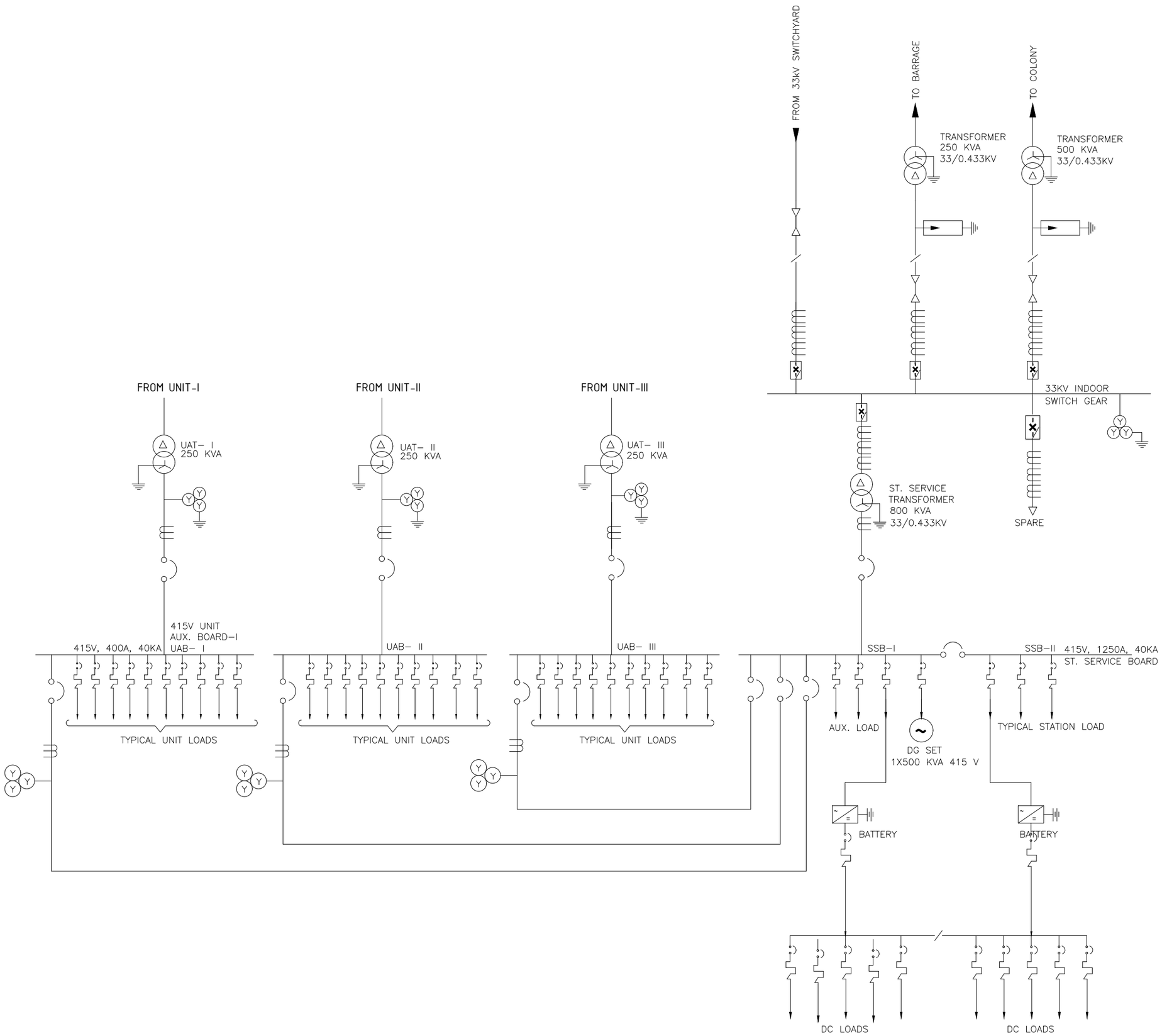

NOTES:

1. THIS DRAWING SHOWS LT & MV SINGLE LINE DIAGRAM FOR THE PROJECT.
2. THE NUMBER AND RATING OF EQUIPMENT AND PROTECTIVE INSTRUMENTS AS SHOWN IN THIS DRAWING ARE INDICATIVE ONLY AND MAY UNDER GO CHANGE DURING DETAIL ENGINEERING.
3. NUMBER OF FEEDERS AS SHOWN IN THE DRAWING IS INDICATIVE ONLY. THE SAME SHALL BE FINALISED DURING DETAILED ENGINEERING STAGE.

LEGEND:-

SYMBOL	LEGEND	DESCRIPTION
		AIR CIRCUIT BREAKER
		MOULDED CASE CIRCUIT BREAKER
		TRANSFORMER
	CT	CURRENT TRANSFORMER
	DG	DIESEL GENERATOR SET
		MV CIRCUIT BREAKER
		11KV XLPE CABLE
		VOLTAGE TRANSFORMER
		LIGHTNING ARRESTER

FOR TENDER PURPOSE ONLY

DATE :- 08-02-2024

REV.	DATE	DRAWN	DESIGNED	CHECKED	APPROVED	SUBJECT OF REVISION
0	08.02.2024	SL	VRS	HKD	BSS	FOR APPROVAL

OWNER :

ASSAM POWER PROJECT DEVELOPMENT COMPANY LTD.

PROJECT :

KARBI LANGPI MIDDLE II HEP (3x8.0 MW)

TITLE:

SINGLE LINE DIAGRAM
LTAC/MV SYSTEM

TRACTEBEL

TRACTEBEL Engineering pvt. ltd.

Size	Scale	Sheet			Rev.
A1	AS SHOWN	1	OF	1	0
Project No.		Discipline Code			Serial No.
P.020318		TE-E&M-GAD			9756

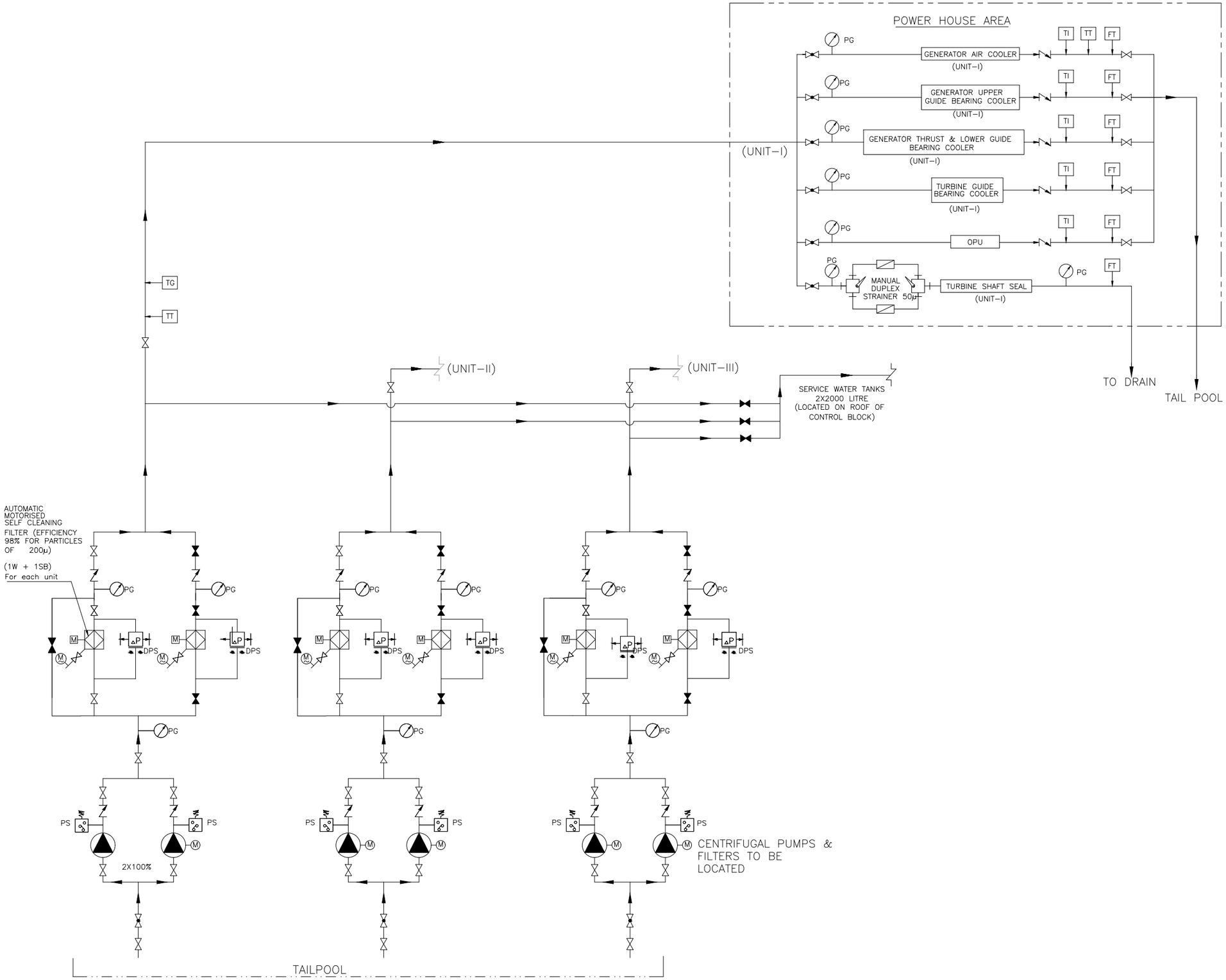

NOTES:

1. THE DRAWING DEPICTS THE COOLING WATER SCHEME PROPOSED FOR PROJECT ONLY.
2. NECESSARY PROVISION FOR OPERATION OF CW SYSTEM FROM PLANT SCADA SHALL BE KEPT.

LEGEND:–

VALVES & INSTRUMENTS

SYMBOL	DESCRIPTION
	PUMP
	GATE VALVE (N.O)
	GATE VALVE (N.C)
	GATE VALVE (N.O) GENERAL ANGLE
	BUTTERFLY VALVE (N.O.)
	BUTTERFLY VALVE (N.C.)
	BALL VALVE (N.O.)
	BALL VALVE (N.C.)
	GLOBE VALVE (N.O.)
	GLOBE VALVE (N.C.)
	CHECK VALVE (NRV)
	DRAIN VALVE
	AIR RELEASE VALVE
PRV	PRESSURE REDUCING VALVE
M	MOTORIZED VALVE
	THREE WAY VALVE
	ECCENTRIC VALVE
	FLOAT VALVE
W SV	SAFETY VALVE
E	SOLENOID VALVE – WATER DRAIN
	SOLENOID VALVE – LINE AIR
PG	PRESSURE GAUGE
TI	TEMPERATURE INDICATOR
	DIFFERENTIAL PRESSURE GAUGE
LI	LEVEL INDICATOR
LS	LEVEL SWITCH
TS	TEMPERATURE SWITCH
FS	FLOW SWITCH
PS	PRESSURE SWITCH
ΔP DPS	DIFFERENTIAL PR. SWITCH
M	MOTOR
PT	PRESSURE TRANSMITTER
FT	FLOW TRANSMITTER & SWITCH
TT	TEMPERATURE TRANSMITTER

FOR TENDER PURPOSE ONLY

REV.	DATE	DRAWN	DESIGNED	CHECKED	APPROVED	SUBJECT OF REVISION
0	12-07-2023	HS	VRS	HKD	BSS	FOR APPROVAL

OWNER :

ASSAM POWER GENERATION CORPORATION LTD.

PROJECT :

KARBI-LANGPI MIDDLE-II (3X8 MW)
ASSAM, INDIA

TITLE:

COOLING WATER SYSTEM
FLOW DIAGRAM

TRACTEBEL ENGIE

TRACTEBEL Engineering pvt. ltd.

Size	Scale	Sheet	Rev.
A1	NTS	1 OF 1	0

Project No.	Discipline Code	Serial No.
P.020318	TE-E&M-GAD	9752

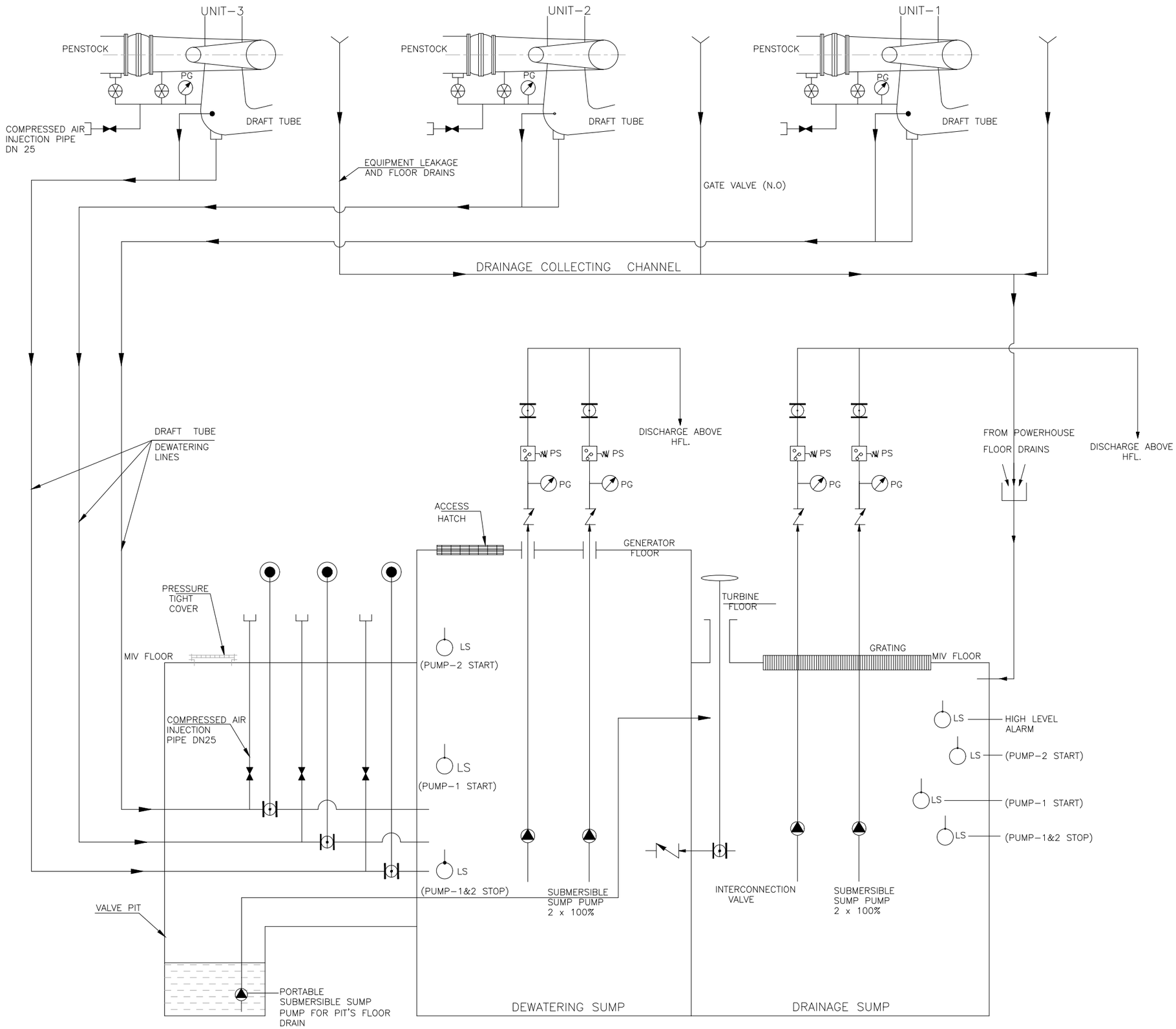

NOTES:

THE SCHEMATIC DIAGRAM AND VARIOUS EQUIPMENTS & DEVICES SHOWN IN THE DRAWING ARE INDICATIVE ONLY FOR GUIDANCE AND DOES NOT SHOW ALL DEVICES, INSTRUMENTATION & VALVES ETC REQUIRED AS PER TECH. SPECIFICATIONS AND COMPLETENESS OF THE SYSTEM. ACTUAL SCHEME SHALL BE FINALIZED BY THE CONTRACTOR DURING DETAILED ENGINEERING,

LEGEND:-

VALVES & INSTRUMENTS

SYMBOL	DESCRIPTION
	PUMP
	GATE VALVE (N.O)
	GATE VALVE (N.C)
	GATE VALVE (N.O) GENERAL ANGLE
	BUTTERFLY VALVE (N.O.)
	BUTTERFLY VALVE (N.C.)
	BALL VALVE (N.O.)
	BALL VALVE (N.C.)
	GLOBE VALVE (N.O.)
	GLOBE VALVE (N.C.)
	CHECK VALVE (NRV)
	DRAIN VALVE
	AIR RELEASE VALVE
PRV	PRESSURE REDUCING VALVE
M	MOTORIZED VALVE
	THREE WAY VALVE
	ECCENTRIC VALVE
	FLOAT VALVE
SV	SAFETY VALVE
E	SOLENOID VALVE – WATER DRAIN
	SOLENOID VALVE – LINE AIR
PG	PRESSURE GAUGE
TI	TEMPERATURE INDICATOR
	DIFFERENTIAL PRESSURE GAUGE
LI	LEVEL INDICATOR
LS	LEVEL SWITCH
TS	TEMPERATURE SWITCH
FS	FLOW SWITCH
PS	PRESSURE SWITCH
ΔP DPS	DIFFERENTIAL PR. SWITCH
M	MOTOR
PT	PRESSURE TRANSMITTER
FT	FLOW TRANSMITTER & SWITCH
TT	TEMPERATURE TRANSMITTER

FOR TENDER PURPOSE ONLY

REV.	DATE	DRAWN	DESIGNED	CHECKED	APPROVED	SUBJECT OF REVISION
0	12-07-2023	HS	VRS	HKD	BSS	FOR APPROVAL

OWNER :

ASSAM POWER GENERATION CORPORATION LTD.

PROJECT :

KARBI-LANGPI MIDDLE-II (3X8 MW)
ASSAM, INDIA

TITLE:

DRAINAGE & DEWATERING SYSTEM
FLOW DIAGRAM

TRACTEBEL ENGIE

TRACTEBEL Engineering pvt. ltd.

Size	Scale	Sheet	Rev.
	NTS	1 OF 1	0

Project No.	Discipline Code	Serial No.
P.020318	TE-E&M-GAD	9753

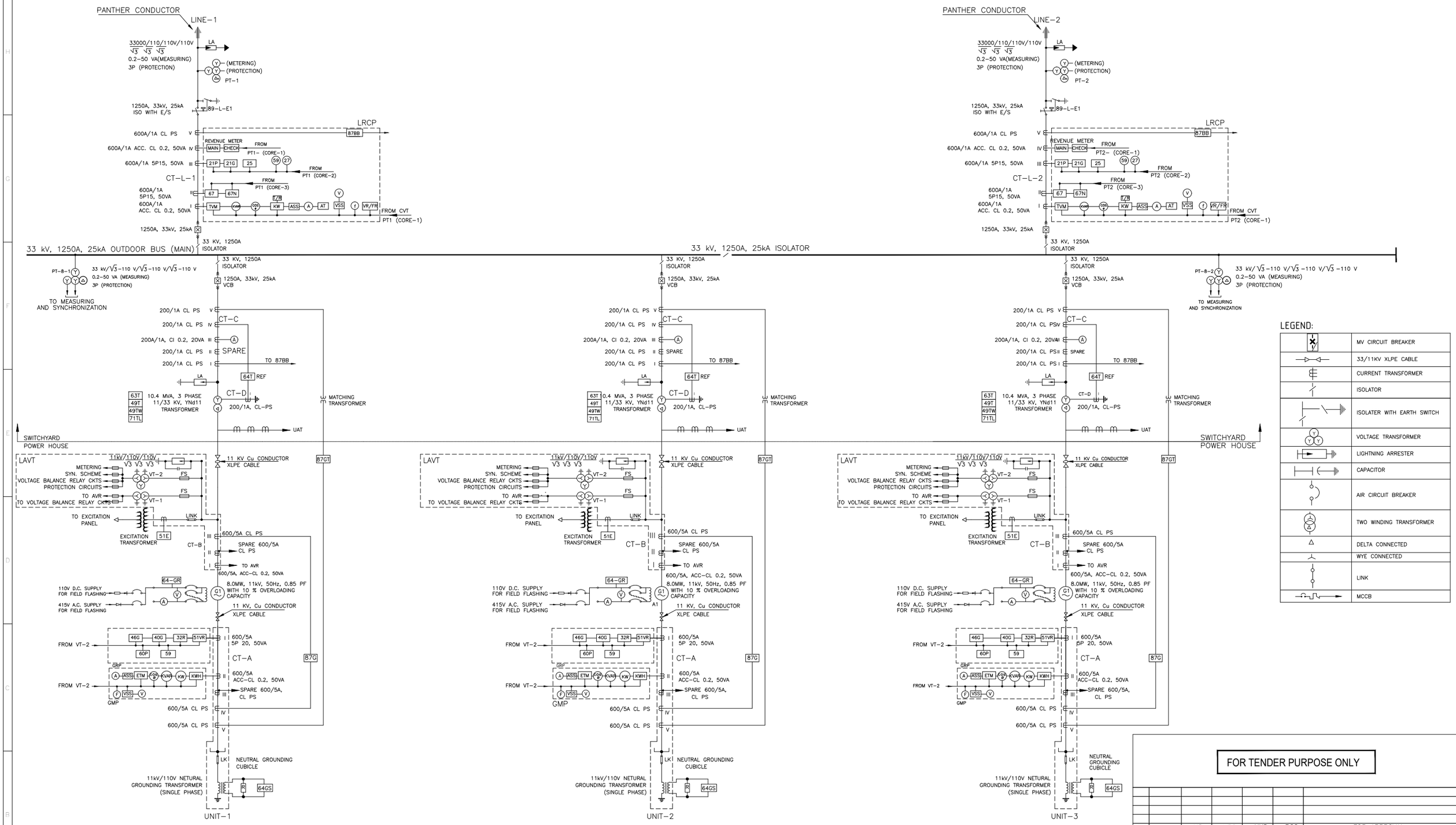

FOR TENDER PURPOSE ONLY

REV.	DATE	DRAWN	DESIGNED	CHECKED	APPROVED	SUBJECT OF REVISION
0	12-07-2023	HS	VRS	HKD	BSS	FOR APPROVAL

GENERAL NOTES:

1. ALL THREE GENERATING UNITS ARE IDENTICAL IN ALL RESPECT.
2. METERING & PROTECTIONS PROVIDED SHALL BE SAME FOR ALL GENERATORS.
3. SYNCHRONISING TROLLEY SHALL BE USED FOR SYNCHRONISING EACH GENERATOR WITH THE BUS.
4. ALL CABLES SHALL BE FRLS (FIRE RETARD LOW SMOKE TYPE)
5. ALL CT CORES SHALL BE SHORTED WHILE NOT IN USE.
6. ALL CT CABLE SHALL BE 6 MM. Sq. STRANDED SCREEN COPPER PVC INSOLATED AND FRLS.
7. ALL PT CABLE SHALL BE 4 MM. Sq. STRANDED SCREEN COPPER PVC INSOLATED AND FRLS.
8. ALL OTHER CABLE SHALL BE 2.5 MM. Sq. STRANDED COPPER PVC INSULATED AND FRLS.
9. ALL GLANDS TO BE USED SHALL BE COMPRESSIBLE AND SHALL BE COPPER.
10. ALL THIMBLES TO BE USED SHALL BE OF COPPER.
11. ALL CT, PT AND ALL OTHER EQUIPMENT INDICATED IN THE SINGLE LINE DIAGRAM SHALL CONFORM TO THE LATEST IS STANDARD AND CODES.
12. ALL METERS SHALL BE PROVIDED WITH TRANSDUCERS FOR REMOTE INDICATION.
13. ENERGY METER FOR BILLING PURPOSE WILL BE PROVIDED AT LINE-1 AND LINE-2.
14. GENERATOR PROTECTION:-
    a) 32R REVERSE POWER
    b) 40G LOSS OF EXICITATION
    c) 46G NEGATIVE PHASE SEQUENCE
    d) 51VR OVERCURRENT TIME RELAY, VOLTAGE CONTROLLED
    e) 59 OVER VOLTAGE RELAY
    f) 60P VOLTAGE OR CURRENT BALANCE RELAY

OWNER :

ASSAM POWER PROJECT DEVELOPMENT COMPANY LTD.

PROJECT :

KARBI LANGPI MIDDLE II HEP (3x8.0 MW)

TITLE:

MAIN SINGLE LINE DIAGRAM
RELAYING & METERING

TRACTEBEL ENGIE

TRACTEBEL Engineering pvt. ltd.

Size	Scale	Sheet			Rev.
A1	AS SHOWN	1	OF	1	0

Project No.	Discipline Code	Serial No.
P.020318	TE-E&M-GAD	9755

DC SUPPLY FOR POWER HOUSE

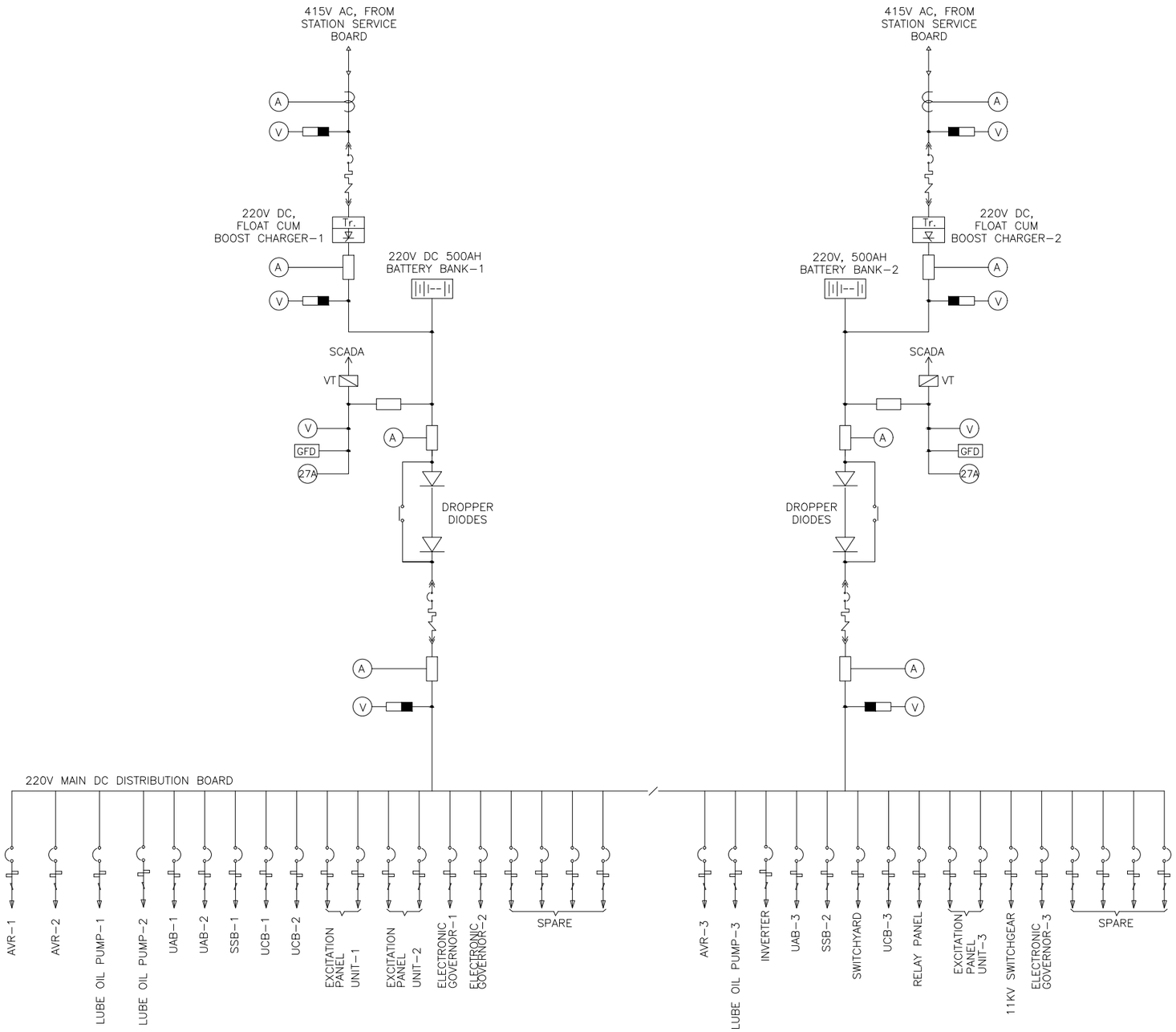

NOTES:

1. THIS DRAWINGS DEPICTS THE 220V DC SCHEME ONLY.
2. DC FEEDER RATING & QUANTITIES AS INDICATED IS TENTATIVE ONLY. THE SAME SHALL BE FINALIZED DURING DETAILED ENGINEERING.
3. THE BATTERIES SHALL BE LEAD ACID PLANTE TYPE.
4. MINIMUM 20% SPARE DC FEEDERS SHALL BE KEPT AS SPARE & MINIMUM ONE.
5. DUPLICATE FEEDERS SHALL BE PROVIDED FOR ALL IMPORTANT PANELS.

LEGEND:-

MCCB	
DOUBLE POLE MCB	
AMMETER	A
FUSE	
DIODE	
CONTACTOR	
VOLTMETER	V

FOR TENDER PURPOSE ONLY

REV.	DATE	DRAWN	DESIGNED	CHECKED	APPROVED	SUBJECT OF REVISION
0	12-07-2023	HS	VRS	HKD	BSS	FOR APPROVAL

OWNER :

ASSAM POWER PROJECT DEVELOPMENT COMPANY LTD.

PROJECT :

KARBI LANGPI MIDDLE II HEP (3x8.0 MW)

TITLE:

SINGLE LINE DIAGRAM
220 V DC SYSTEM

TRACTEBEL ENGIE

TRACTEBEL Engineering pvt. ltd.

Size	Scale	Sheet	Rev.
A1	AS SHOWN	1 OF 1	0

Project No.	Discipline Code	Serial No.
P.020318	TE-E&M-GAD	9757

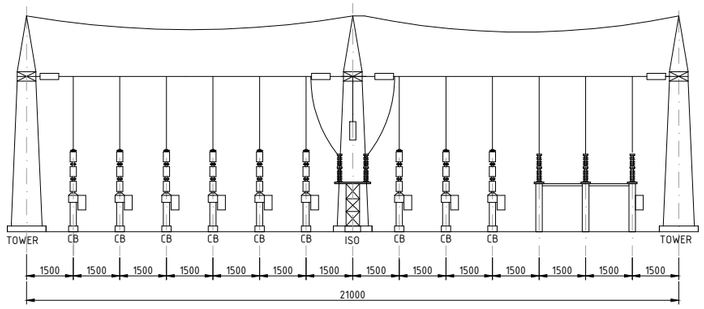

SECTION A-A

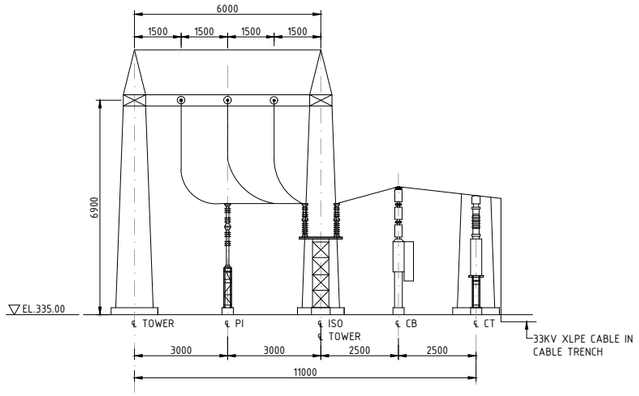

SECTION B-B (GENERATOR BAY)

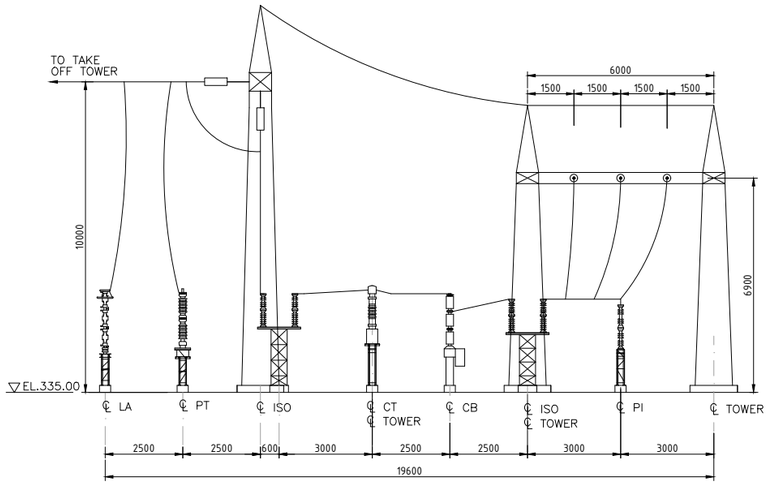

SECTION C-C (OUT GOING FEEDER BAY)

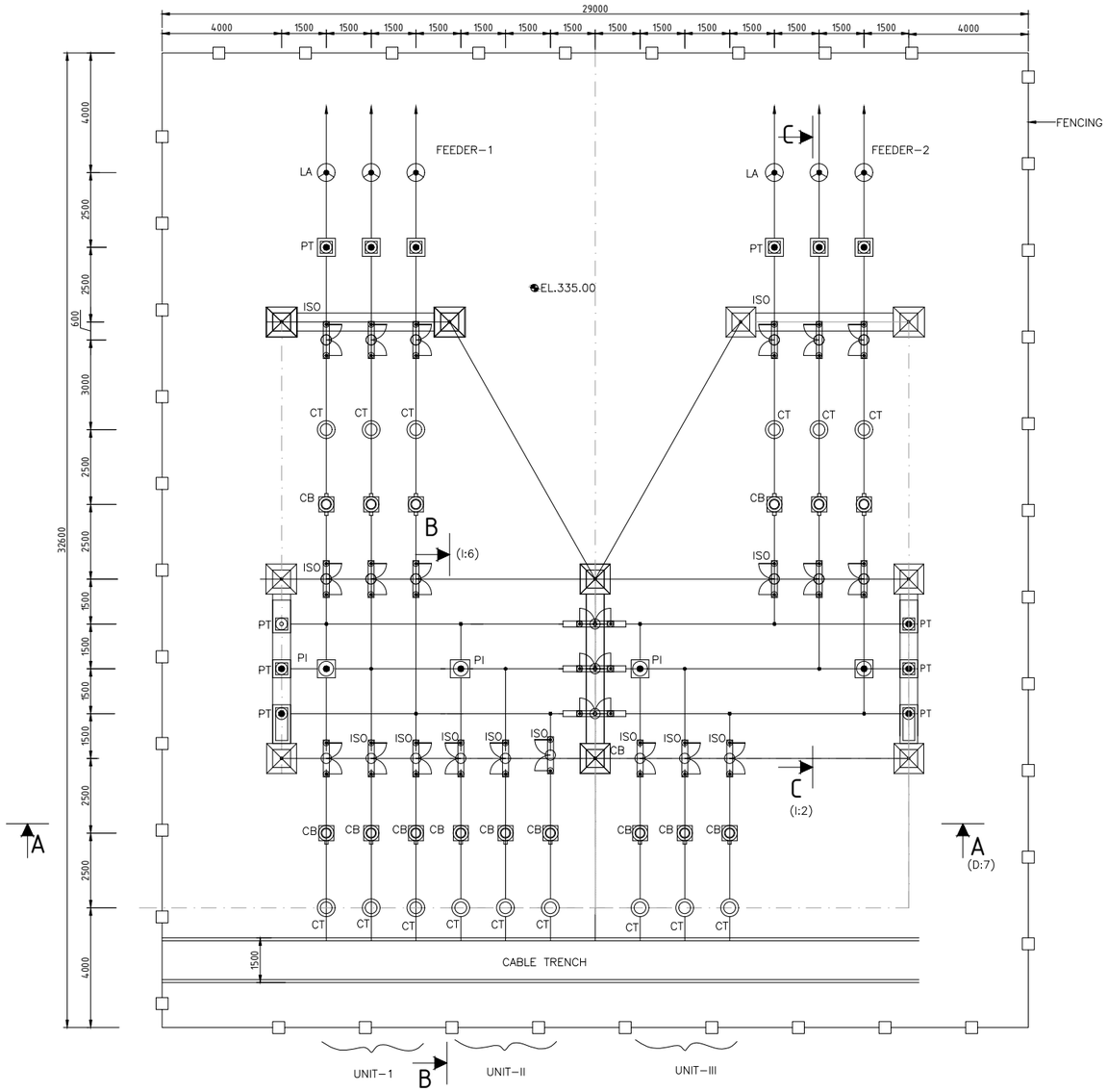

33KV SWITCHYARD PLAN

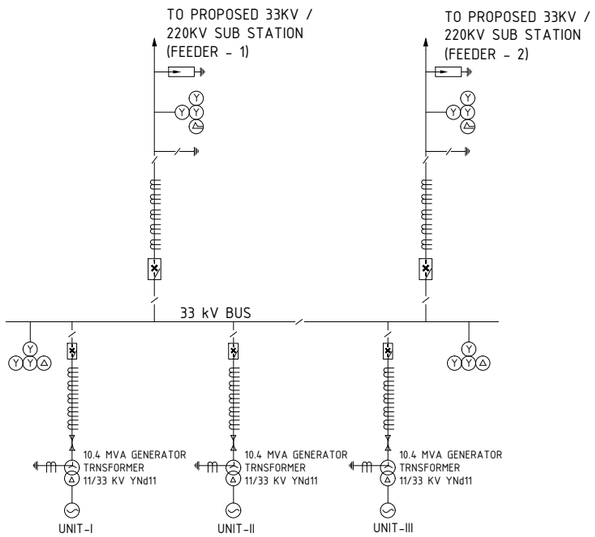

SINGLE LINE DIAGRAM

NOTES:

1. ALL DIMENSIONS ARE IN MILLIMETERS & ELEVATIONS IN METERS.
2. THE DRAWING SHOWS TENTATIVE LAYOUT OF 33 KV SWITCHYARD EQUIPMENT COMPRISING OF 33 KV BUS,LINE BAYS AND GENERATOR TRANSFORMER BAYS.ALL THREE GENERATOR TRANSFORMERS,STATION SERVICE TRANSFORMER AND DG SET ARE ALSO TO BE LOCATED IN THIS SWITCHYARD.
3. VARIOUS DIMENSIONS AS SHOWN IN THE DRAWING ARE TENTATIVE AND SHALL BE FINALIZED DURING DETAILED ENGINEERING AFTER RECEIPT OF DETAILED DRAWINGS FROM SUPPLIERS OF TRANSFORMERS,DG SET,CIRCUIT BREAKERS,CT,PT ETC.

LEGEND:-

SYM. FOR PLAN	DESCRIPTION	SYM FOR SLD
	CIRCUIT BREAKER	
	ISOLATOR	
	CT	
	PT	
	POST INSULATOR	
	LA	

FOR TENDER PURPOSE ONLY

REV.	DATE	DRAWN	DESIGNED	CHECKED	APPROVED	SUBJECT OF REVISION
0	12-07-2023	HS	VRS	HKD	BSS	FOR APPROVAL

OWNER :

ASSAM POWER PROJECT DEVELOPMENT COMPANY LTD.

PROJECT :

KARBI LANGPI MIDDLE II HEP (3x8.0 MW)

TITLE:

33KV SWITCHYARD
PLAN & SECTION

TRACTEBEL ENGIE

TRACTEBEL Engineering pvt. ltd.

Size	Scale	Sheet			Rev.
A1	AS SHOWN	1	OF	1	0

Project No.	Discipline Code	Serial No.
P.020318	TE-E&M-GAD	9758

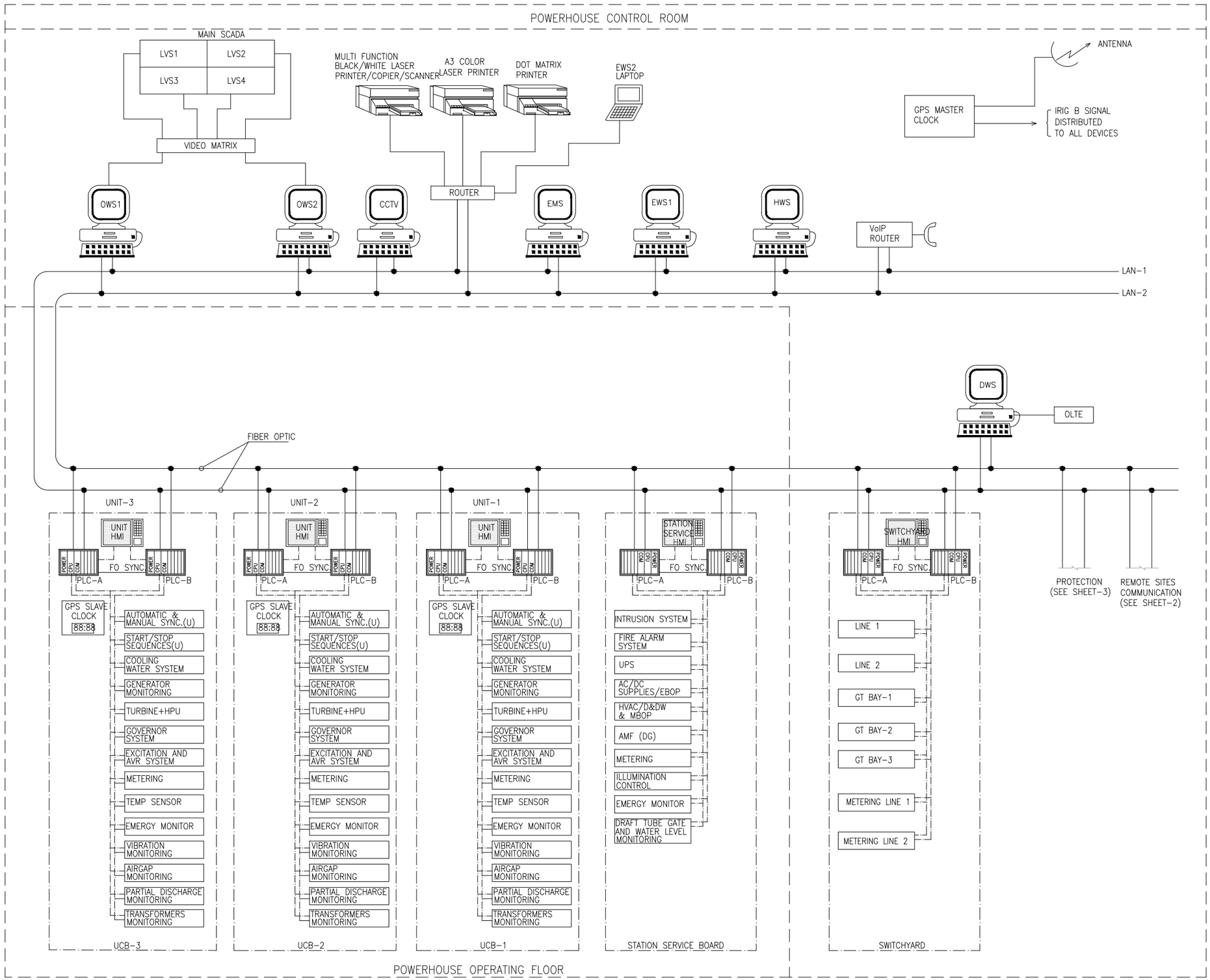

NOTES

1. DEVICES INCLUDE: PLC,WORKSTATION PROTECTION RELAYS AND RTU.

RELAYS AND RTU.

ETHERNET SWITCH

DEFINITION :-

OWS : OPERATOR WORKSTATION
EWS : ENGINEER WORKSTATION
ZCS : ZOOM CONTROL STATION
EMS : ENERGY MANAGEMENT STATION
LVS : LARGE VIDEO SCREEN
DWS : DISPATCH WORKSTATION
HWS : HISTORIAN WORKSTATION
CCTV : CLOSED-CIRCUIT TELEVISION
VoIP : VOICE OVER INTERNET PROTOCOL
FO : FIBER OPTIC
PLCC : POWER LINE CARRIER COMMUNICATION
LAN : LOCAL AREA NETWORK
UCB : UNIT CONTROL BOARD
CCB : COMMON CONTROL BOARD
IRIG : INTER RANGE INSTRUMENTATIONGROUP
GPS : GLOBAL POSITIONING SYSTEM
AIS : AIR INSULATED SWITCHGEAR
OLTE : OPTICAL LINE TERMINAL EQUIPMENT

FOR TENDER PURPOSE ONLY

REV.	DATE	DRAWN	DESIGNED	CHECKED	APPROVED	SUBJECT OF REVISION
0	12-07-2023	HS	VRS	HKD	BSS	FOR APPROVAL

OWNER :

ASSAM POWER GENERATION CORPORATION LTD.

PROJECT :

KARBI-LANGPI MIDDLE-II (3X8 MW)
ASSAM, INDIA

TITLE:

POWER HOUSE
SCADA SYSTEM ARCHITECTURE
GENERAL

TRACTEBEL ENGIE

TRACTEBEL Engineering pvt. ltd.

Size	Scale	Sheet	Rev.
A1	AS SHOWN	1 OF 3	0

Project No.	Discipline Code	Serial No.
P.020318	TE-E&M-GAD	9759

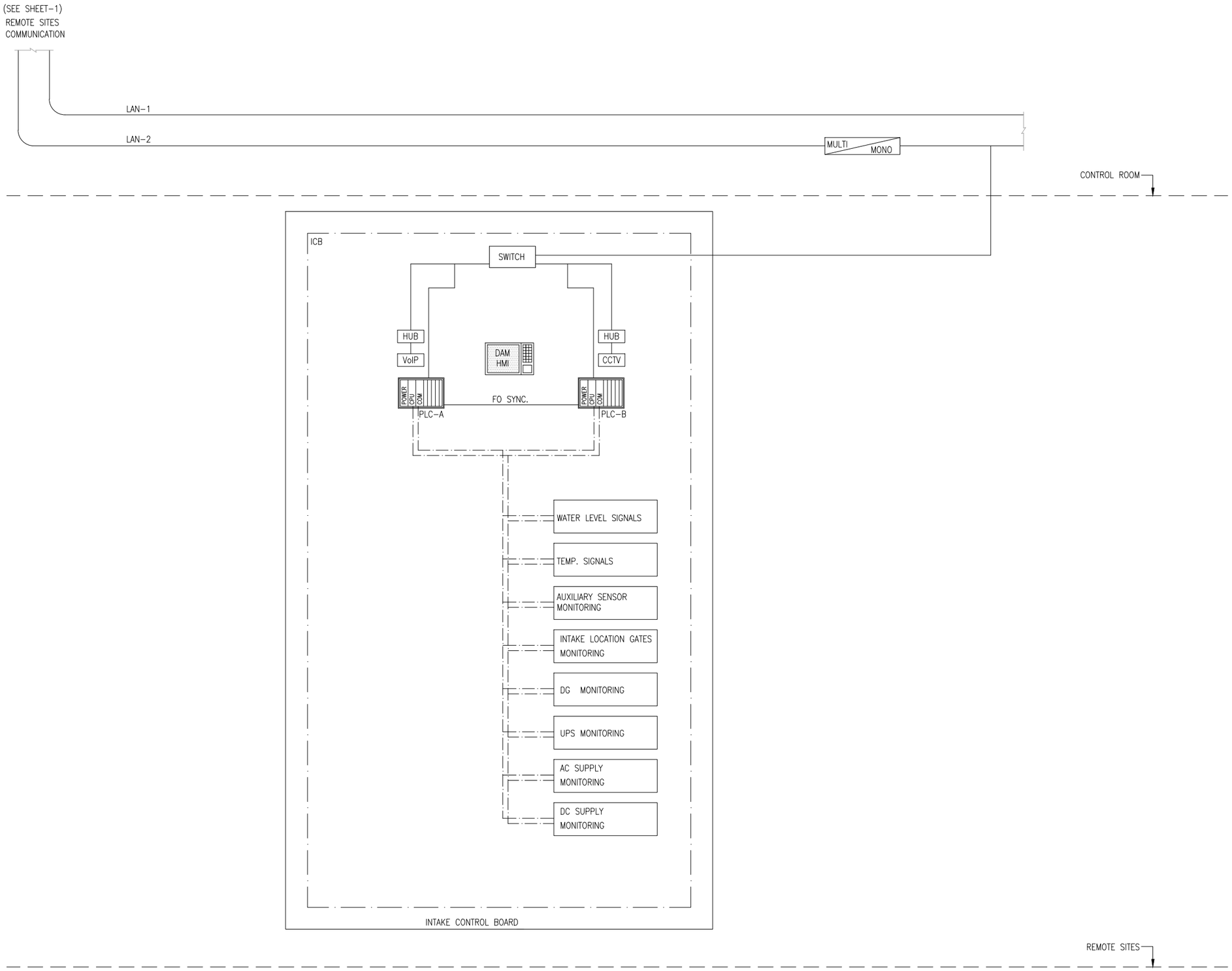

DEFINITION :-

OWS : OPERATOR WORKSTATION
ICB : INTAKE CONTROL BOARD
SCB : SPILLWAY CONTROL BOARD
CCTV : CLOSED-CIRCUIT TELEVISION
VoIP : VOICE OVER INTERNET PROTOCOL
FO : FIBER OPTIC
LAN : LOCAL AREA NETWORK
HMI : HUMAN MACHINE INTERFACE
CPU : CENTRAL PROCESSING UNIT
PLC : PROGRAMMABLE LOGIC CONTROLLER VALVE
PPBV : PENSTOCK PROTECTION BUTTERFLY
OPU : OIL PRESSURE UNIT
PRPFM: PENSTOCK RUPTURING PROTECTION FLOW METER

FOR TENDER PURPOSE ONLY

REV.	DATE	DRAWN	DESIGNED	CHECKED	APPROVED	SUBJECT OF REVISION
0	12-07-2023	HS	VRS	HKD	BSS	FOR APPROVAL

OWNER :

ASSAM POWER GENERATION CORPORATION LTD.

PROJECT :

KARBI-LANGPI MIDDLE-II (3X8 MW)
ASSAM, INDIA

TITLE:

POWER HOUSE
SCADA SYSTEM ARCHITECTURE
REMOTE SITES COMMUNICATION

TRACTEBEL
ENGIE
TRACTEBEL Engineering pvt. ltd.

Size	Scale	Sheet	Rev.
A1	AS SHOWN	2 OF 3	0

Project No.	Discipline Code	Serial No.
P.020318	TE-E&M-GAD	9759

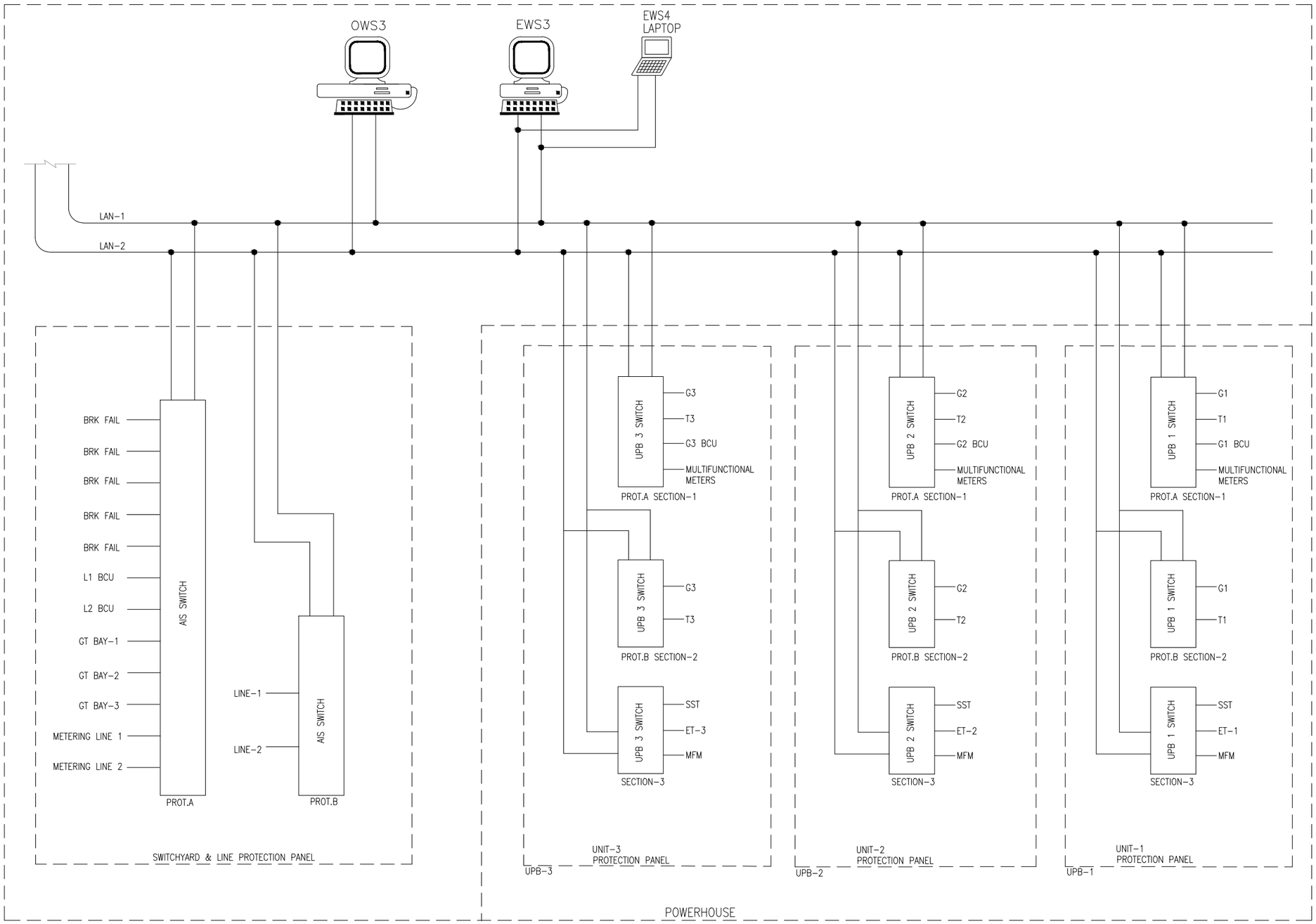

DEFINITION :-

OWS : OPERATOR WORKSTATION
EWS : ENGINEER WORKSTATION UPB :
UNIT PROTECTION BOARD LAN : LOCAL
AREA NETWORK
RTU : REMOTE TERMINAL UNIT
FO : FIBER OPTIC
AIS : AIR INSULATED SWITCHGEAR

FOR TENDER PURPOSE ONLY

REV.	DATE	DRAWN	DESIGNED	CHECKED	APPROVED	SUBJECT OF REVISION
0	06-06-2023	HS	VRS	HKD	BSS	FOR APPROVAL

OWNER :

ASSAM POWER GENERATION CORPORATION LTD.

PROJECT :

KARBI-LANGPI MIDDLE-II (3X8 MW)
ASSAM, INDIA

TITLE:

POWER HOUSE
SCADA SYSTEM ARCHITECTURE
ELECTRICAL PROTECTION

TRACTEBEL ENGIE

TRACTEBEL Engineering pvt. ltd.

Size	Scale	Sheet	Rev.
A1	AS SHOWN	3 OF 3	0

Project No.	Discipline Code	Serial No.
P.020318	TE-E&M-GAD	9759

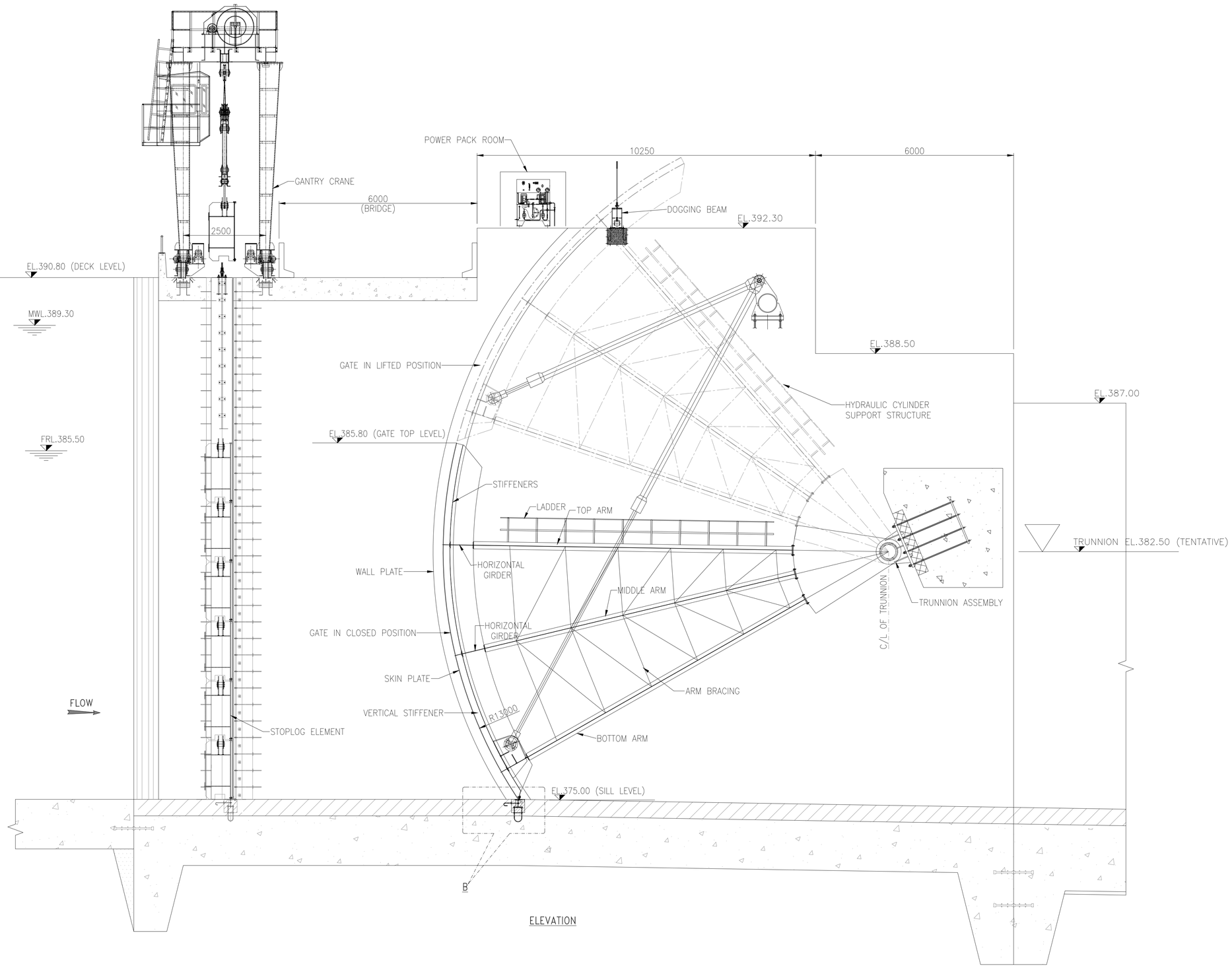

ELEVATION

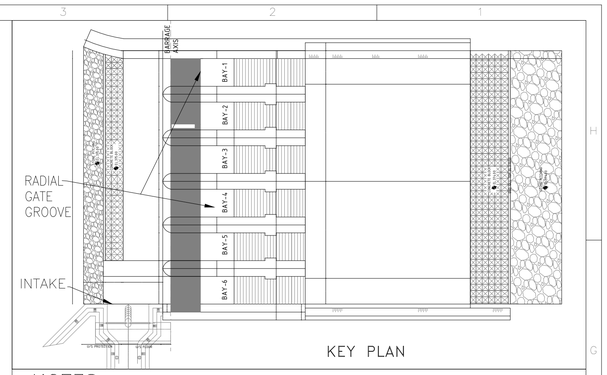

KEY PLAN

NOTES

1. ALL DIMENSIONS ARE IN MILLIMETERS, LEVELS ARE IN METERS.
2. DO NOT MEASURE DIMENSIONS ON THE DRAWING, ONLY WRITTEN DIMENSION SHOULD BE FOLLOWED.
3. ALL THE TOLERANCE FOR GATES AND EMBEDDED PARTS SHALL CONFIRM TO IS:4623 (LATEST REVISION)
4. ANCHORAGES FOR HYDRAULIC HOIST TRUNNION SUPPORT STRUCTURE SHALL BE SUPPLIED BY THE MANUFACTURER.HYDRAULIC HOIST SHALL BE LOCATED IN SUCH A WAY THAT A MINIMUM CLEARANCE OF 100MM IS ALWAYS AVAILABLE BETWEEN THE HOIST TRUNNION SUPPORT FRAME AND ARM OF RADIAL GATE IN ALL GATE POSITION.
5. THE BLOCKOUT & GATE GROOVE DIMENSIONS ARE TENTATIVE AND FOR GUIDANCE ONLY. HOWEVER, THE ACTUAL SIZE BLOCKOUT DIMENSION DEPEND ON THE SIZE OF 2ND STAGE PARTS. AND SHALL BE FINALIZED AT DETAILED ENGINEERING STAGE.
6. ALL SURFACES BETWEEN FIRST STAGE AND 2nd STAGE CONCRETE SHALL BE MADE ROUGH BY CHIPPING, BEFORE CONCRETING 2nd STAGE. SUITABLE DOWEL BARS SHALL BE LEFT IN FIRST STAGE CONCRETE ENSURE PROPER BOND BETWEEN FIRST AND 2nd STAGE CONCRETE.
7. TRUNNION ANCHOR ARRANGEMENT SHOWN TENTATIVE SHALL BE FINALIZED IN DETAIL DESIGN.

SALIENT FEATURES		
1	NO. OF OPENING	4 NOS.
2	CLEAR OPENING	10.50 M
3	CLEAR WIDTH	7.00 M
4	SILL LEVEL	375.00 M
5	DECK LEVEL	390.80 M
6	FRL/ MWL	385.50 M
7	MWL	389.30 M
8	TRUNNION EL.	382.5 M (TENTETIVE.)
9	LOCATION OF SIDE SEAL & SKIN PLATE	U/S (UP STREAM)
10	OPERATING EQUIPMENT	HYD. HOIST

LEGEND

1ST STAGE CONCRETE (GRADE M-30)

2ND STAGE CONCRETE (GRADE M-35)

FOR TENDER PURPOSE ONLY

REV.	DATE	DRAWN	DESIGNED	CHECKED	APPROVED	SUBJECT OF REVISION
0	19-06-2023	SS	XX	XXX	BSS	

OWNER :

ASSAM POWER GENERATION CORPORATION LTD.

PROJECT :

KARBI-LANGPI MIDDLE-II (3X8 MW)
ASSAM, INDIA

TITLE:

RADIAL GATE WITHOUT FLAP (FOR BAY 1 & 4)
GENERAL ARRAGEMENT

TRACTEBEL ENGIE

TRACTEBEL Engineering pvt. ltd.

Size	Scale	Sheet	Rev.
A1	AS SHOWN	1 OF 2	0

Project No.	Discipline Code	Serial No.
P.020318	TE-H&M-GAD	9551

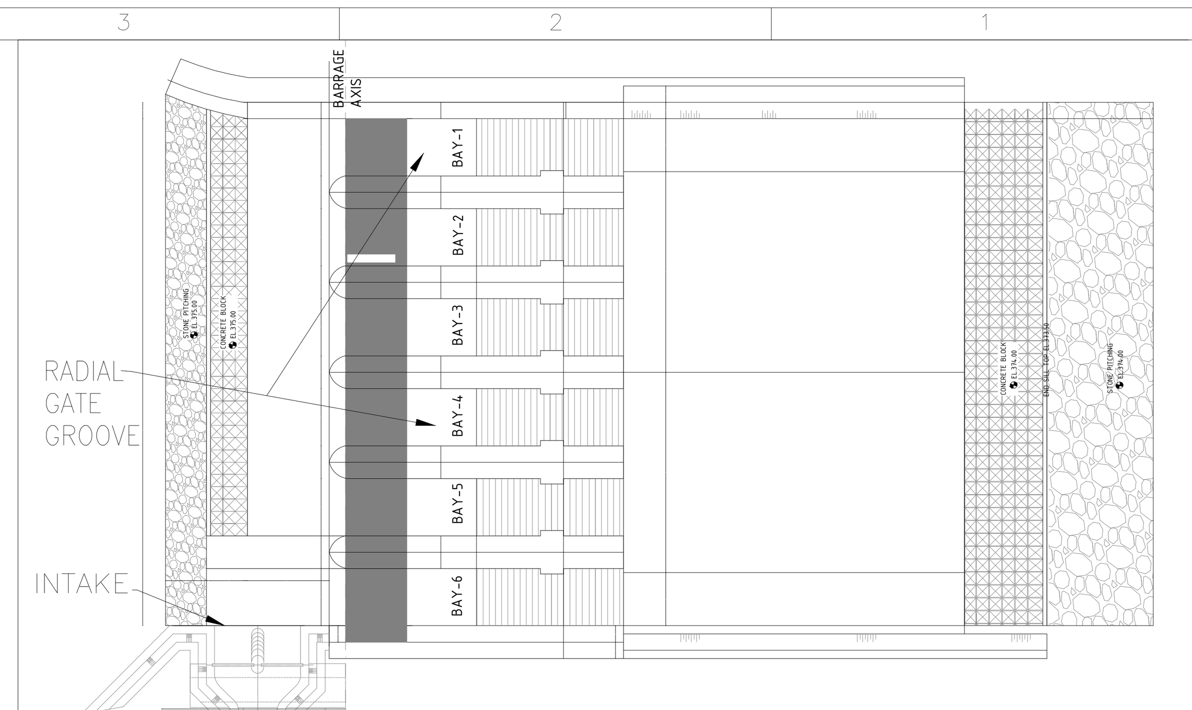

KEY PLAN

NOTES

1. ALL DIMENSIONS ARE IN MILLIMETERS, LEVELS ARE IN METERS.
2. DO NOT MEASURE DIMENSIONS ON THE DRAWING, ONLY WRITTEN DIMENSION SHOULD BE FOLLOWED.
3. ALL THE TOLERANCE FOR GATES AND EMBEDDED PARTS SHALL CONFIRM TO IS:4623 (LATEST REVISION)
4. ANCHORAGES FOR HYDRAULIC HOIST TRUNNION SUPPORT STRUCTURE SHALL BE SUPPLIED BY THE MANUFACTURER.HYDRAULIC HOIST SHALL BE LOCATED IN SUCH A WAY THAT A MINIMUM CLEARANCE OF 100MM IS ALWAYS AVAILABLE BETWEEN THE HOIST TRUNNION SUPPORT FRAME AND ARM OF RADIAL GATE IN ALL GATE POSITION.
5. THE BLOCKOUT & GATE GROOVE DIMENSIONS ARE TENTATIVE AND FOR GUIDANCE ONLY. HOWEVER, THE ACTUAL SIZE BLOCKOUT DIMENSION DEPEND ON THE SIZE OF 2ND STAGE PARTS. AND SHALL BE FINALIZED AT DETAILED ENGINEERING STAGE.
6. ALL SURFACES BETWEEN FIRST STAGE AND 2nd STAGE CONCRETE SHALL BE MADE ROUGH BY CHIPPING, BEFORE CONCRETING 2nd STAGE. SUITABLE DOWEL BARS SHALL BE LEFT IN FIRST STAGE CONCRETE ENSURE PROPER BOND BETWEEN FIRST AND 2nd STAGE CONCRETE.
7. TRUNNION ANCHOR ARRANGEMENT SHOWN TENTATIVE SHALL BE FINALIZED IN DETAIL DESIGN.

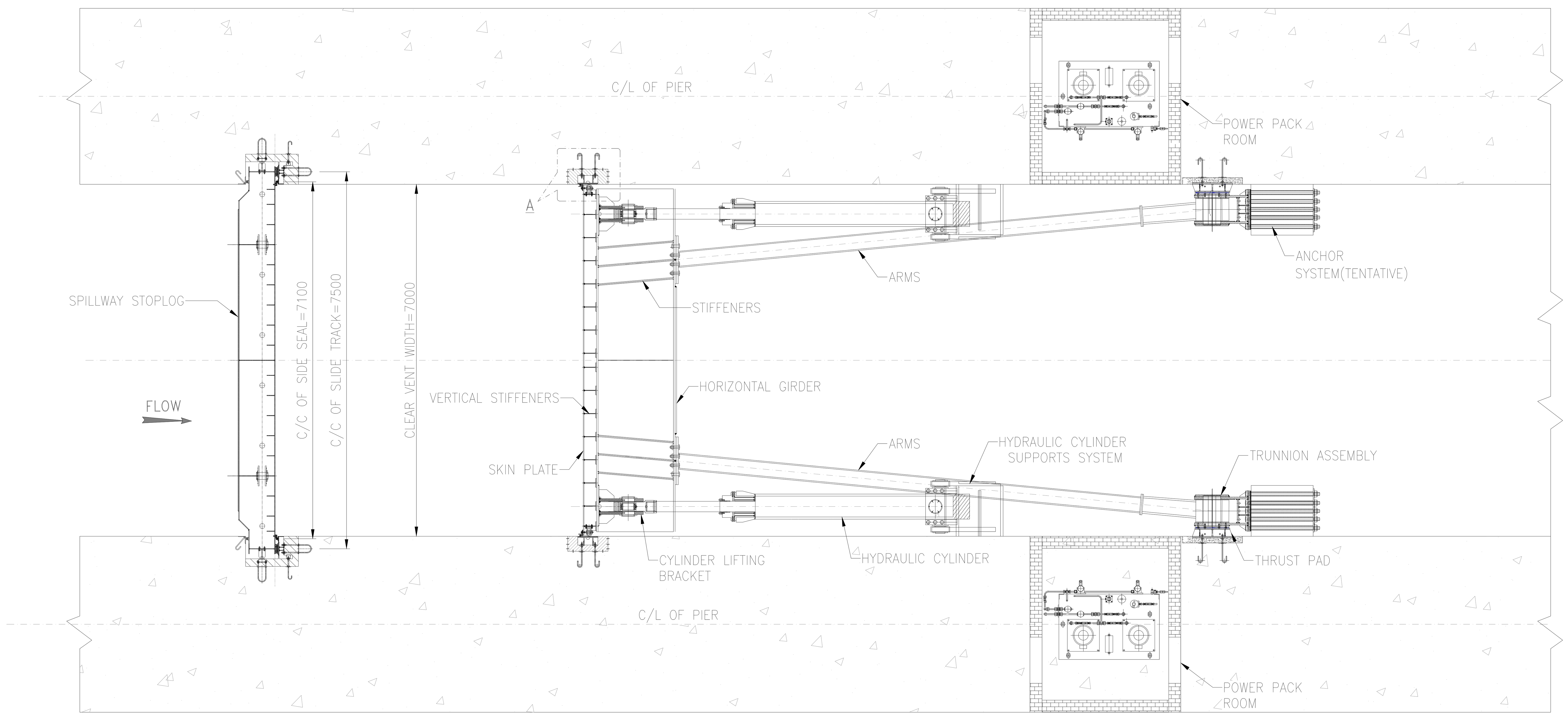

PLAN

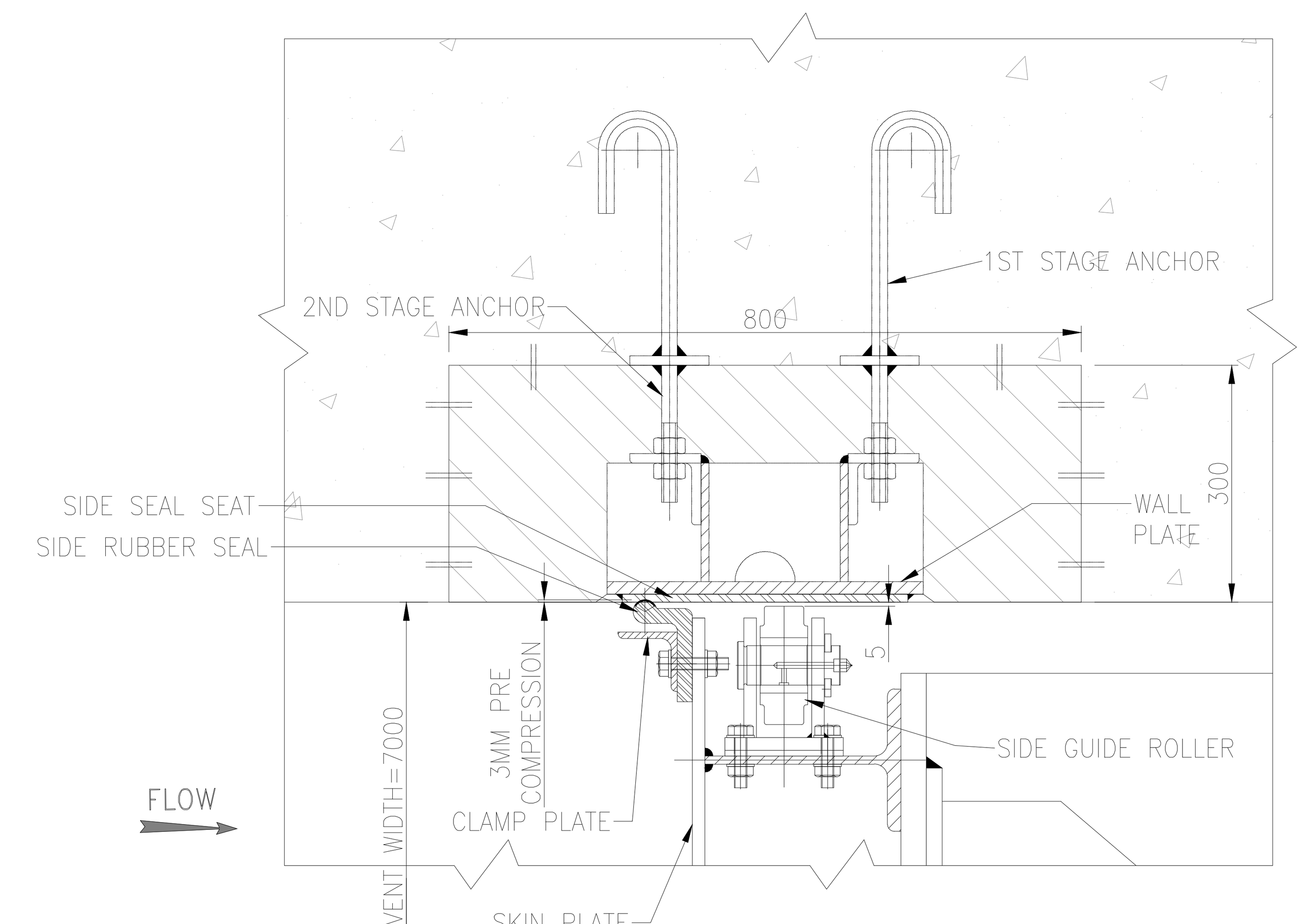

DETAIL-A

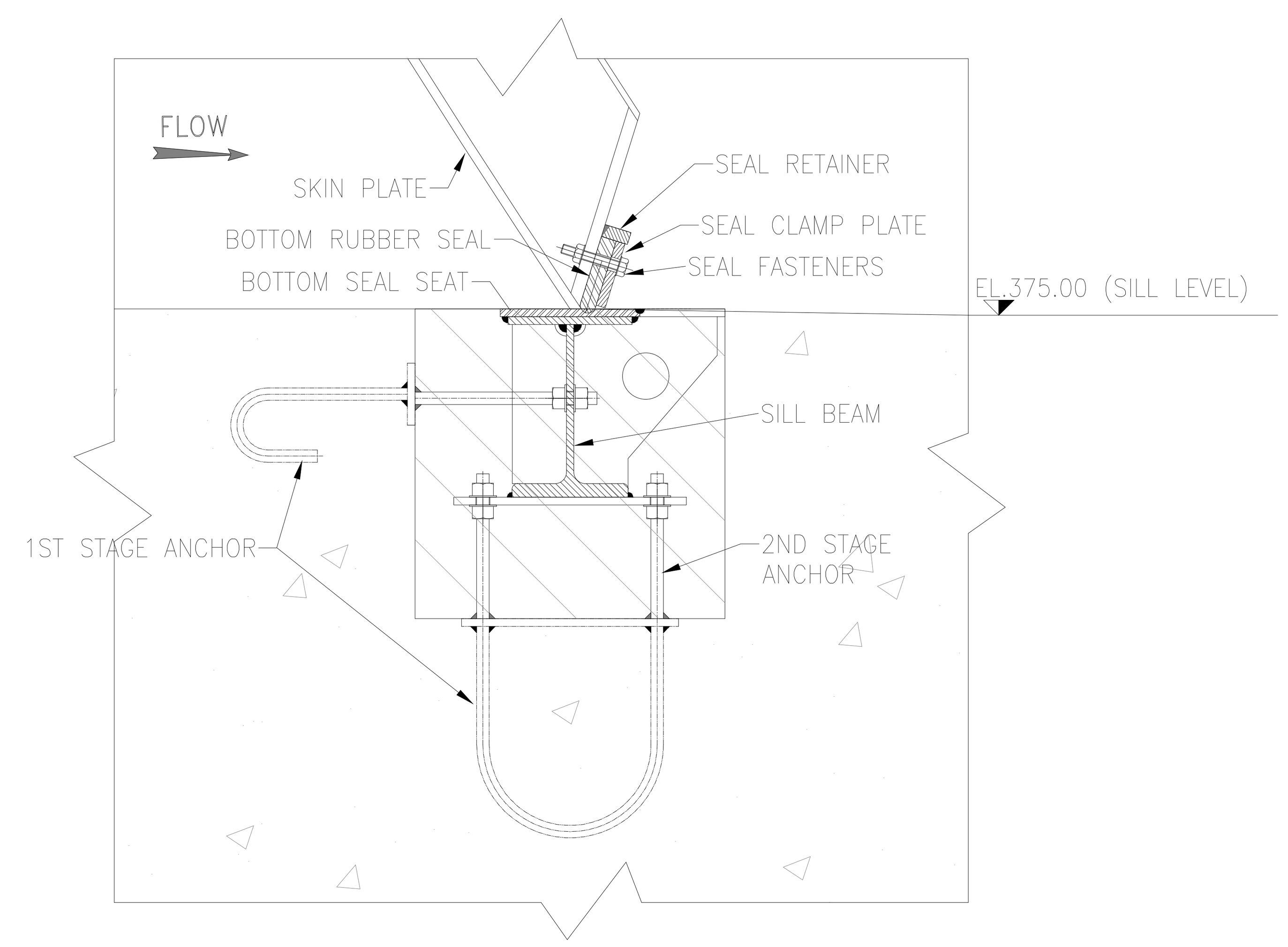

DETAIL-B

SALIENT FEATURES		
1	NO. OF OPENING	4 NOS.
2	CLEAR OPENING	10.50 M
3	CLEAR WIDTH	7.00 M
4	SILL LEVEL	375.00 M
5	DECK LEVEL	390.80 M
6	FRL/ MWL	385.50 M
7	MWL	389.30 M
8	TRUNNION EL.	382.5 M (TENTETIVE.)
9	LOCATION OF SIDE SEAL & SKIN PLATE	U/S (UP STREAM)
10	OPERATING EQUIPMENT	HYD. HOIST

LEGEND

1ST STAGE CONCRETE (GRADE M-30)

2ND STAGE CONCRETE (GRADE M-35)

FOR TENDER PURPOSE ONLY

REV.	DATE	DRAWN	DESIGNED	CHECKED	APPROVED	SUBJECT OF REVISION
0	19-06-2023	SS	XX	XXX	BSS	

OWNER :

ASSAM POWER GENERATION CORPORATION LTD.

PROJECT :

KARBI-LANGPI MIDDLE-II (3X8 MW)
ASSAM, INDIA

TITLE:

RADIAL GATE WITHOUT FLAP (FOR BAY 1 & 4)
GENERAL ARRANGEMENT

TRACTEBEL ENGIE
TRACTEBEL Engineering pvt. ltd.

Size	Scale	Sheet	Rev.
A1	AS SHOWN	2 OF 2	0

Project No.	Discipline Code	Serial No.
P.020318	TE-H&M-GAD	9551

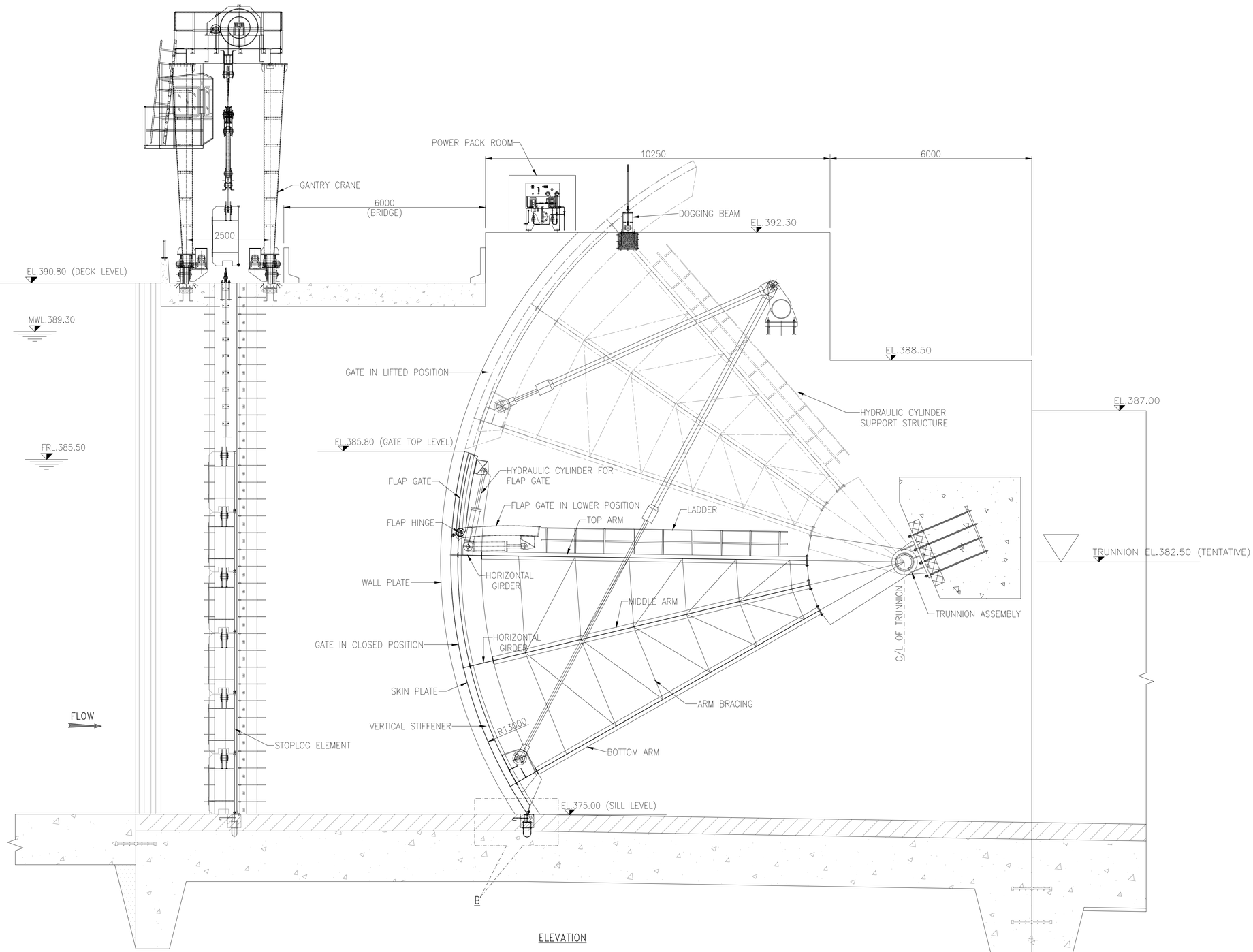

ELEVATION

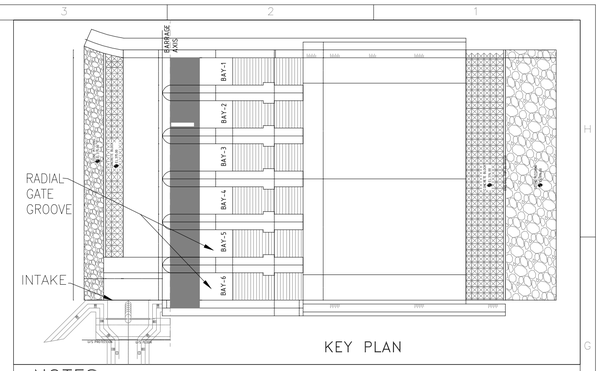

KEY PLAN

NOTES

1. ALL DIMENSIONS ARE IN MILLIMETERS, LEVELS ARE IN METERS.
2. DO NOT MEASURE DIMENSIONS ON THE DRAWING, ONLY WRITTEN DIMENSION SHOULD BE FOLLOWED.
3. ALL THE TOLERANCE FOR GATES AND EMBEDDED PARTS SHALL CONFIRM TO IS:4623 (LATEST REVISION)
4. ANCHORAGES FOR HYDRAULIC HOIST TRUNNION SUPPORT STRUCTURE SHALL BE SUPPLIED BY THE MANUFACTURER.HYDRAULIC HOIST SHALL BE LOCATED IN SUCH A WAY THAT A MINIMUM CLEARANCE OF 100MM IS ALWAYS AVAILABLE BETWEEN THE HOIST TRUNNION SUPPORT FRAME AND ARM OF RADIAL GATE IN ALL GATE POSITION.
5. THE BLOCKOUT & GATE GROOVE DIMENSIONS ARE TENTATIVE AND FOR GUIDANCE ONLY. HOWEVER, THE ACTUAL SIZE BLOCKOUT DIMENSION DEPEND ON THE SIZE OF 2ND STAGE PARTS. AND SHALL BE FINALIZED AT DETAILED ENGINEERING STAGE.
6. ALL SURFACES BETWEEN FIRST STAGE AND 2nd STAGE CONCRETE SHALL BE MADE ROUGH BY CHIPPING, BEFORE CONCRETING 2nd STAGE. SUITABLE DOWEL BARS SHALL BE LEFT IN FIRST STAGE CONCRETE ENSURE PROPER BOND BETWEEN FIRST AND 2nd STAGE CONCRETE.
7. TRUNNION ANCHOR ARRANGEMENT SHOWN TENTATIVE SHALL BE FINALIZED IN DETAIL DESIGN.

SALIENT FEATURES		
1	NO. OF OPENING	2 NOS.
2	CLEAR OPENING	10.50 M
3	CLEAR WIDTH	7.00 M
4	SILL LEVEL	375.00 M
5	DECK LEVEL	390.80 M
6	FRL	385.50 M
7	MWL	389.30 M
8	TRUNNION EL.	382.5 M (TENTETIVE.)
9	LOCATION OF SIDE SEAL & SKIN PLATE	U/S (UP STREAM)
10	OPERATING EQUIPMENT	HYD. HOIST

LEGEND

1ST STAGE CONCRETE (GRADE M-30)

2ND STAGE CONCRETE (GRADE M-35)

FOR TENDER PURPOSE ONLY

REV.	DATE	DRAWN	DESIGNED	CHECKED	APPROVED	SUBJECT OF REVISION
0	19-06-2023	SS	XX	XXX	BSS	

OWNER :

ASSAM POWER GENERATION CORPORATION LTD.

PROJECT :

KARBI-LANGPI MIDDLE-II (3X8 MW)
ASSAM, INDIA

TITLE:

RADIAL GATE WITH FLAP (FOR BAY 5 & 6)
GENERAL ARRAGEMENT

TRACTEBEL ENGIE

TRACTEBEL Engineering pvt. ltd.

Size	Scale	Sheet	Rev.
A1	AS SHOWN	1 OF 2	0

Project No.	Discipline Code	Serial No.
P.020318	TE-H&M-GAD	9552

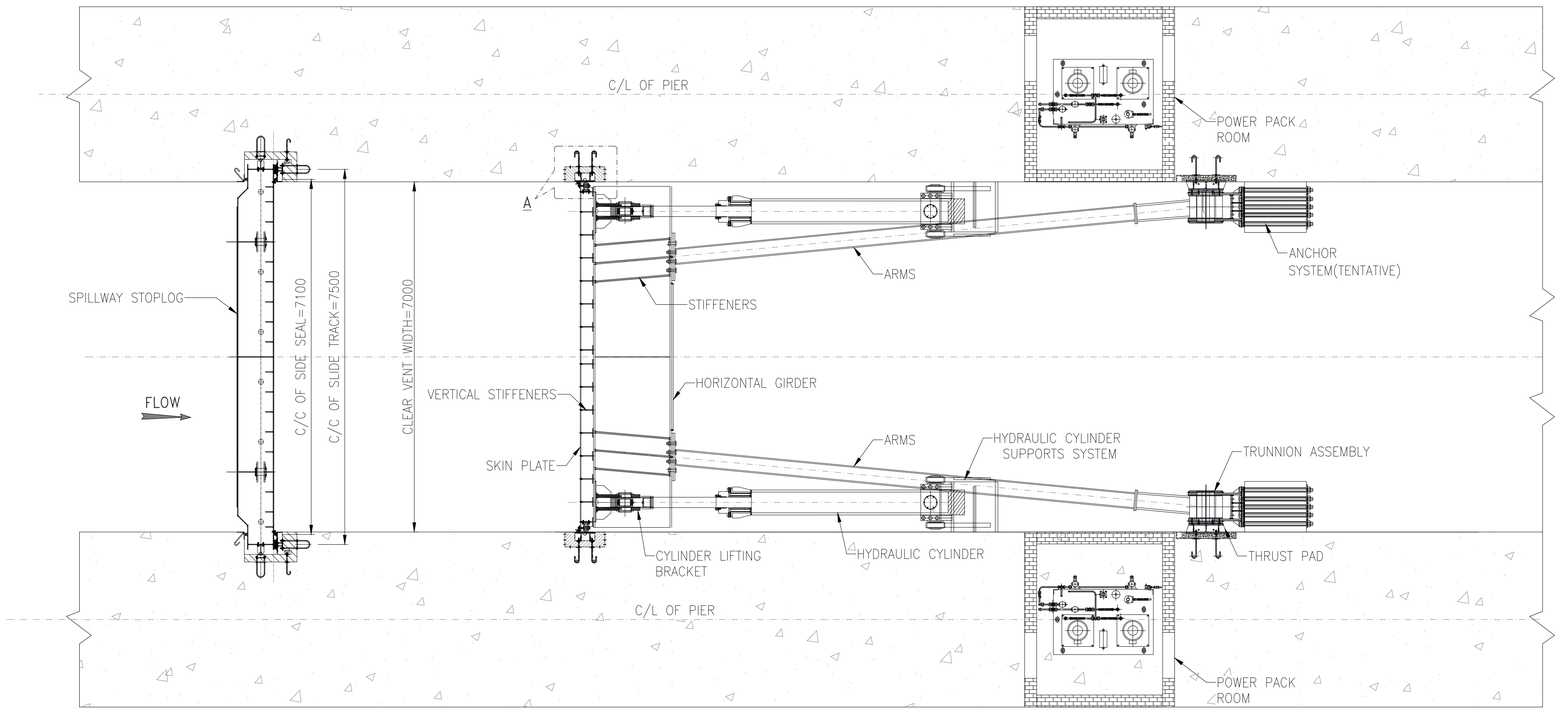

PLAN

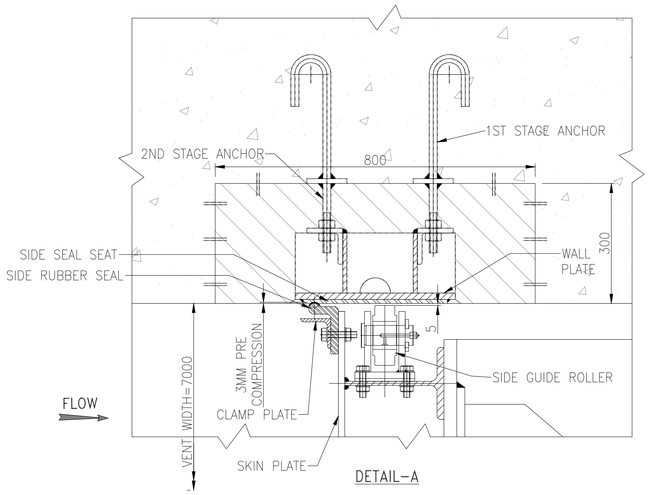

DETAIL–A

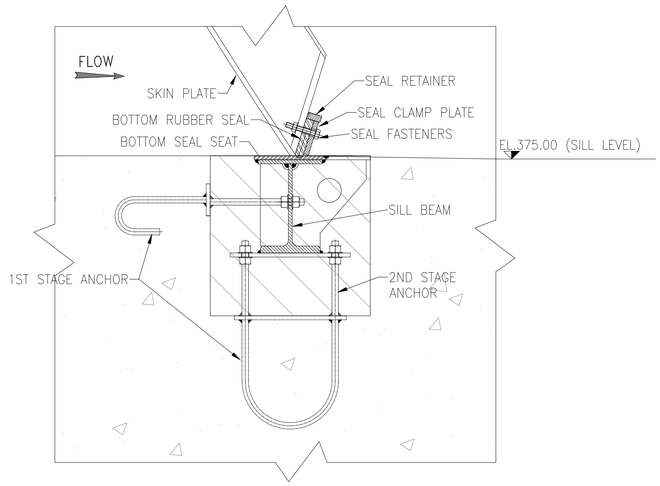

DETAIL–B

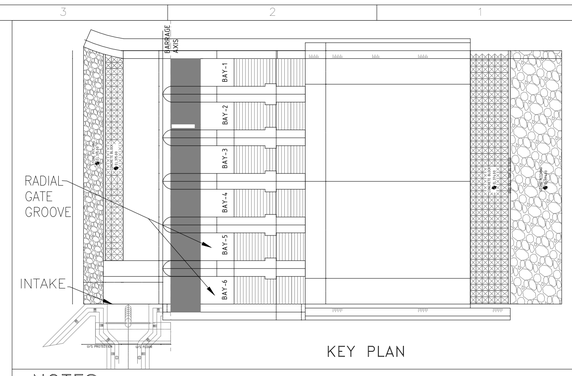

KEY PLAN

NOTES

1. ALL DIMENSIONS ARE IN MILLIMETERS, LEVELS ARE IN METERS.
2. DO NOT MEASURE DIMENSIONS ON THE DRAWING, ONLY WRITTEN DIMENSION SHOULD BE FOLLOWED.
3. ALL THE TOLERANCE FOR GATES AND EMBEDDED PARTS SHALL CONFIRM TO IS:4623 (LATEST REVISION)
4. ANCHORAGES FOR HYDRAULIC HOIST TRUNNION SUPPORT STRUCTURE SHALL BE SUPPLIED BY THE MANUFACTURER.HYDRAULIC HOIST SHALL BE LOCATED IN SUCH A WAY THAT A MINIMUM CLEARANCE OF 100MM IS ALWAYS AVAILABLE BETWEEN THE HOIST TRUNNION SUPPORT FRAME AND ARM OF RADIAL GATE IN ALL GATE POSITION.
5. THE BLOCKOUT & GATE GROOVE DIMENSIONS ARE TENTATIVE AND FOR GUIDANCE ONLY. HOWEVER, THE ACTUAL SIZE BLOCKOUT DIMENSION DEPEND ON THE SIZE OF 2ND STAGE PARTS. AND SHALL BE FINALIZED AT DETAILED ENGINEERING STAGE.
6. ALL SURFACES BETWEEN FIRST STAGE AND 2nd STAGE CONCRETE SHALL BE MADE ROUGH BY CHIPPING, BEFORE CONCRETING 2nd STAGE. SUITABLE DOWEL BARS SHALL BE LEFT IN FIRST STAGE CONCRETE ENSURE PROPER BOND BETWEEN FIRST AND 2nd STAGE CONCRETE.
7. TRUNNION ANCHOR ARRANGEMENT SHOWN TENTATIVE SHALL BE FINALIZED IN DETAIL DESIGN.

SALIENT FEATURES		
1	NO. OF OPENING	2 NOS.
2	CLEAR OPENING	10.50 M
3	CLEAR WIDTH	7.00 M
4	SILL LEVEL	375.00 M
5	DECK LEVEL	390.80 M
6	FRL	385.50 M
7	MWL	389.30 M
8	TRUNNION EL.	382.5 M (TENTETIVE.)
9	LOCATION OF SIDE SEAL & SKIN PLATE	U/S (UP STREAM)
10	OPERATING EQUIPMENT	HYD. HOIST

LEGEND

1ST STAGE CONCRETE (GRADE M–30)

2ND STAGE CONCRETE (GRADE M–35)

FOR TENDER PURPOSE ONLY

REV.	DATE	DRAWN	DESIGNED	CHECKED	APPROVED	SUBJECT OF REVISION
0	19–06–2023	SS	XX	XXX	BSS	

OWNER :

ASSAM POWER GENERATION CORPORATION LTD.

PROJECT :

KARBI-LANGPI MIDDLE-II (3X8 MW)
ASSAM, INDIA

TITLE:

RADIAL GATE WITH FLAP (FOR BAY 5 & 6)
GENERAL ARRAGEMENT

TRACTEBEL engie

TRACTEBEL Engineering pvt. ltd.

Size	Scale	Sheet	Rev.
A1	AS SHOWN	2 OF 2	0

Project No.	Discipline Code	Serial No.
P.020318	TE-H&M-GAD	9552

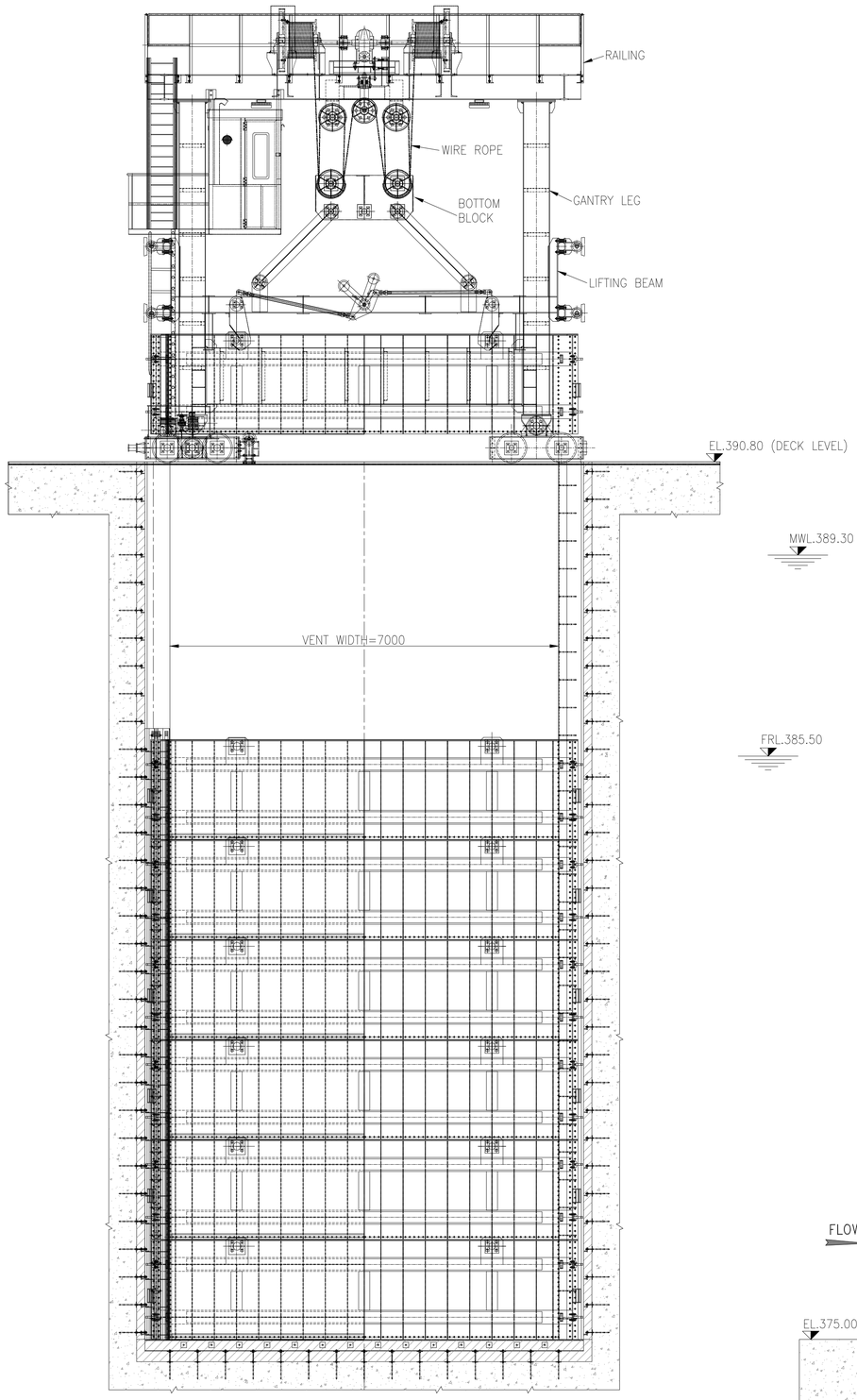

ELEVATION

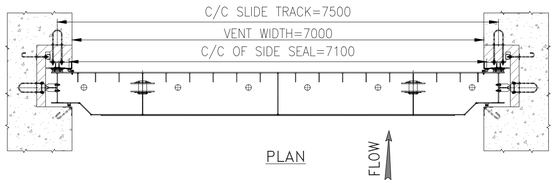

PLAN

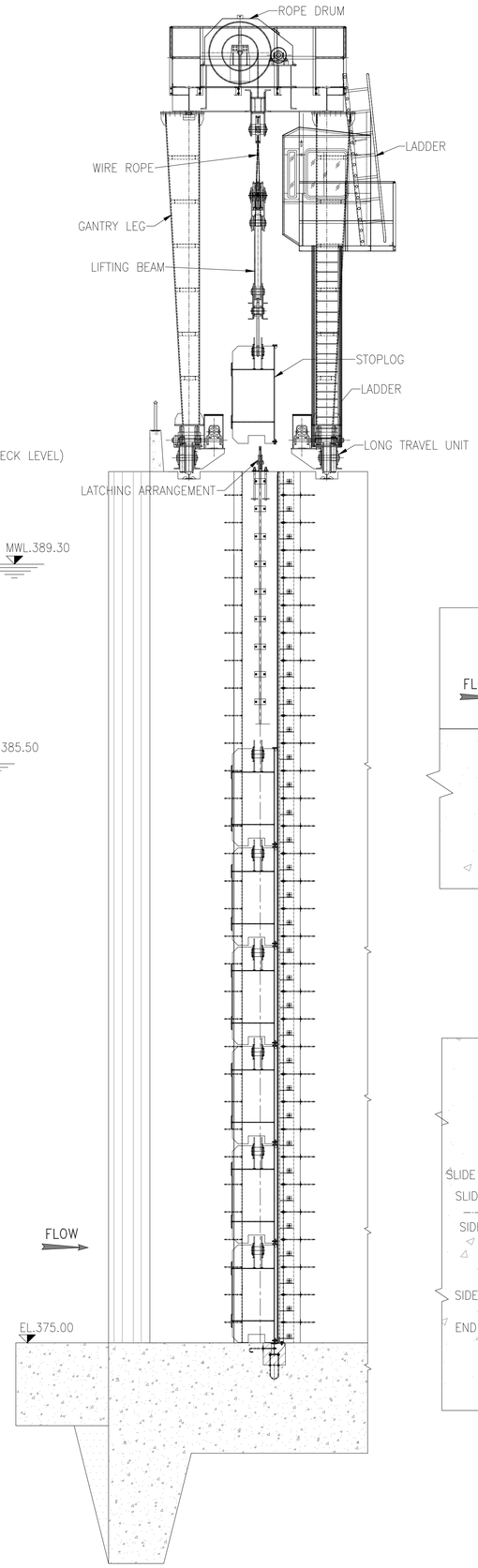

SECTION THROUGH C/L OF BAY

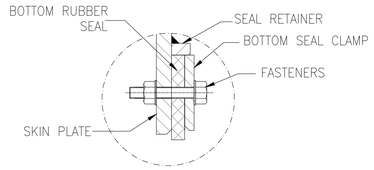

DETAIL-D

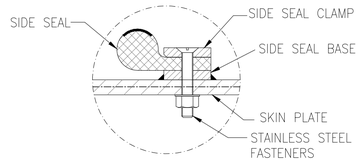

DETAIL-C

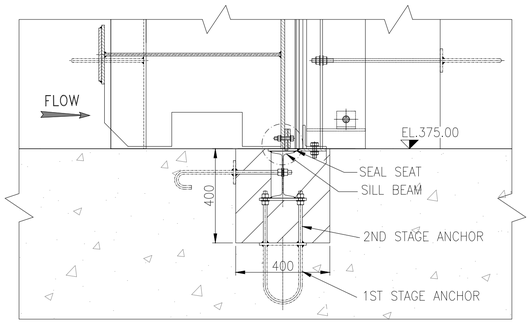

DETAIL-A

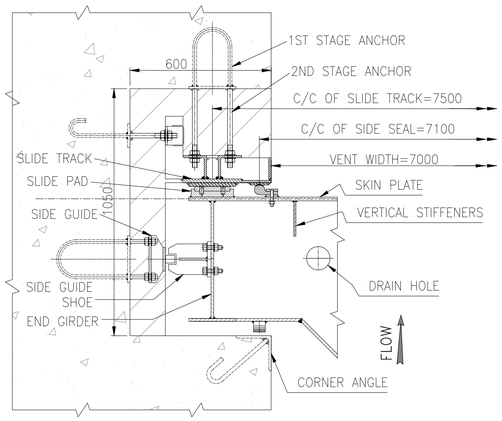

DETAIL-B

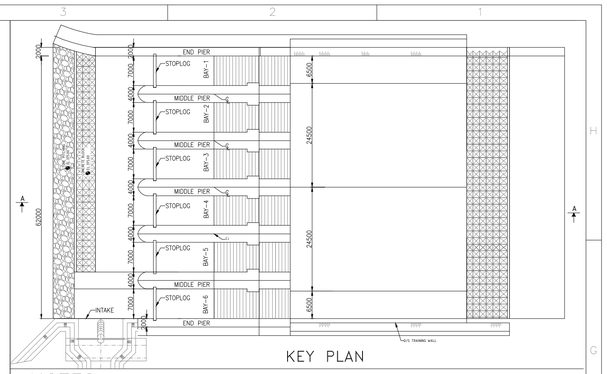

KEY PLAN

NOTES

1. ALL DIMENSIONS ARE IN MILLIMETERS, LEVELS ARE IN METERS.
2. DO NOT MEASURE DIMENSIONS ON THE DRAWING, ONLY WRITTEN DIMENSION SHOULD BE FOLLOWED.
3. ALL THE TOLERANCE FOR GATES AND EMBEDDED PARTS SHALL CONFIRM TO IS:5620 (LATEST REVISION)
4. FACES OF TRACKS, SEAL SEATS AND GUIDES SHALL BE IN TRUE PLANE WITHIN THE TOLERANCES AS SPECIFIED IN IS:5620 (LATEST REVISION)
5. SUITABLE REMOVAL GRATING SHALL BE PROVIDED AT EL390.80M
6. ALL SURFACES BETWEEN FIRST STAGE AND 2nd STAGE CONCRETE SHALL BE MADE ROUGH BY CHIPPING, BEFORE CONCRETING 2nd STAGE. SUITABLE DOWEL BARS SHALL BE LEFT IN FIRST STAGE CONCRETE ENSURE PROPER BOND BETWEEN FIRST AND 2nd STAGE CONCRETE.
7. THE SIZE OF BLOCKOUTS SHOWN ARE TENTATIVE.

SALIENT FEATURES		
1	NO. OF OPENING	6 NOS.
2	CLEAR OPENING HEIGHT	10.50 M
3	CLEAR WIDTH	7.00 M
4	SILL LEVEL	375.00 M
5	DECK LEVEL	390.80 M
6	FRL	385.50 M
7	MWL	389.30 M
8	GATE TYPE	SLIDE TYPE
9	LOCATION OF SIDE SEAL & SKIN PLATE	DOWN STREAM
10	OPERATING EQUIPMENT	GANTRY CRANE

LEGEND

1ST STAGE CONCRETE (GRADE M-30)

2ND STAGE CONCRETE (GRADE M-35)

FOR TENDER PURPOSE ONLY

REV.	DATE	DRAWN	DESIGNED	CHECKED	APPROVED	SUBJECT OF REVISION
0	19-06-2023	SS	XX	XXX	BSS	

OWNER :

ASSAM POWER GENERATION CORPORATION LTD.

PROJECT :

KARBI-LANGPI MIDDLE-II (3X8 MW)
ASSAM, INDIA

TITLE:

STOPLOG FOR BARRAGE GATE
GENERAL ARRAGEMENT

TRACTEBEL Engineering pvt. ltd.

Size	Scale	Sheet			Rev.
A1	AS SHOWN	1	OF	1	0
Project No.	Discipline Code	System Code			Serial No.
P.020318	TE-H&M-GAD				9553

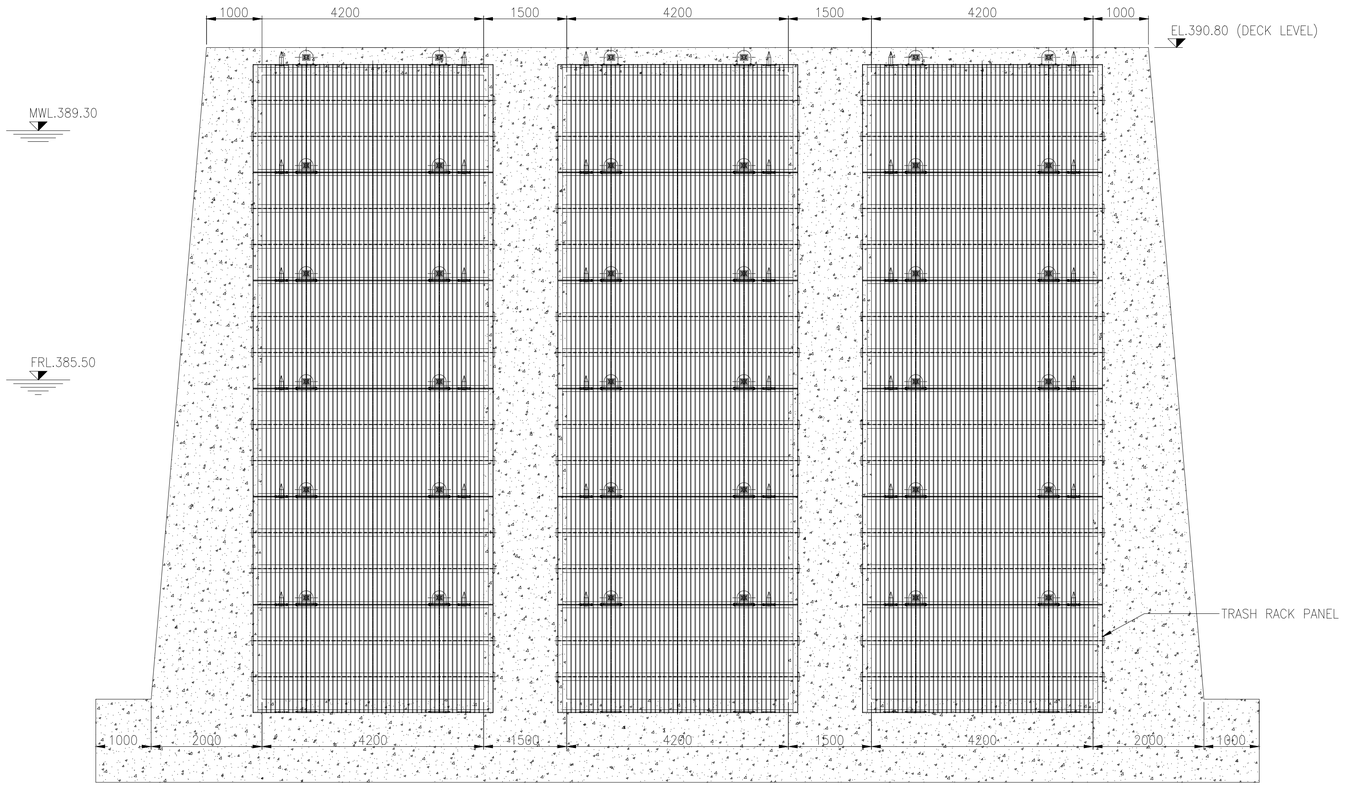

ELEVATION

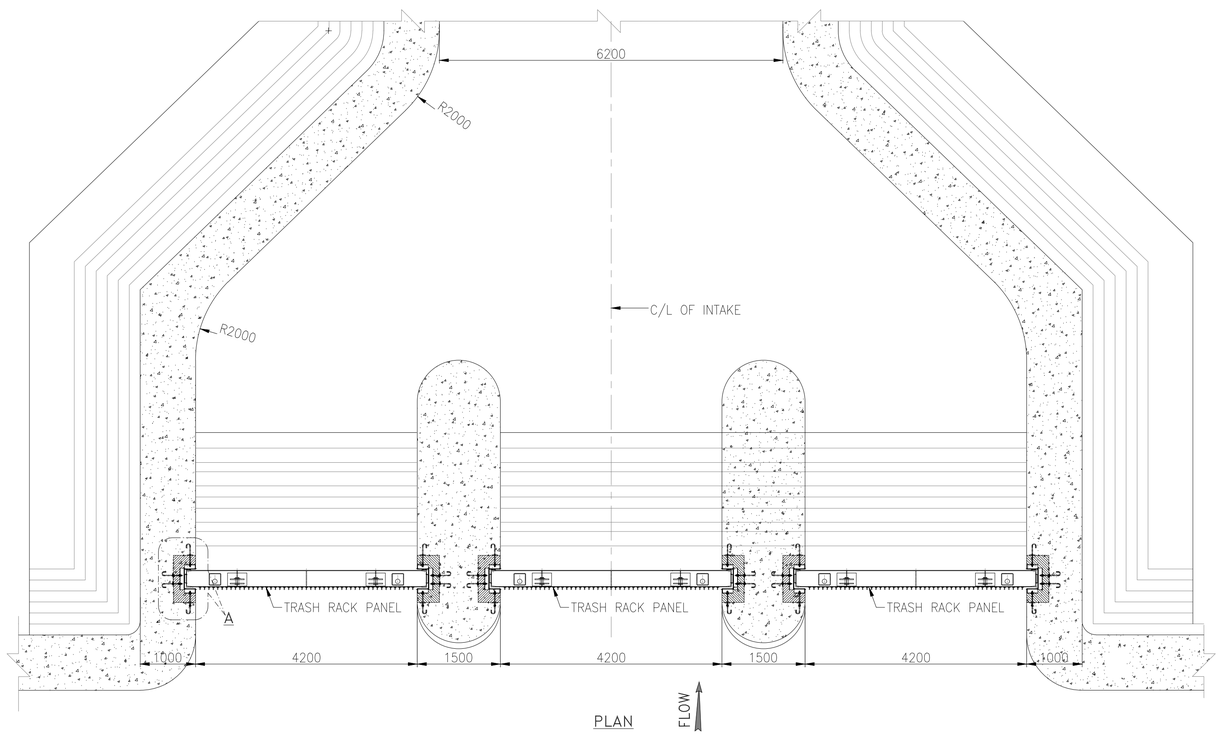

PLAN

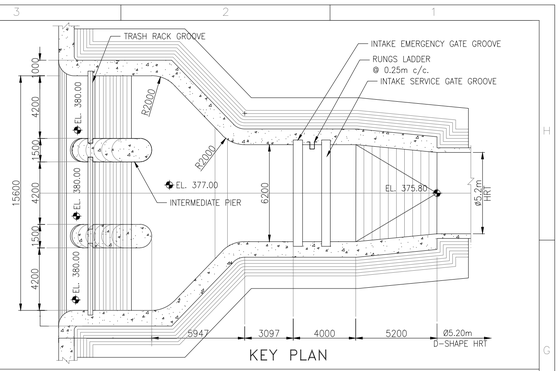

KEY PLAN

NOTES

1. ALL DIMENSIONS ARE IN MILLIMETERS, LEVELS ARE IN METERS.
2. DO NOT MEASURE DIMENSIONS ON THE DRAWING, ONLY WRITTEN DIMENSION SHOULD BE FOLLOWED.
3. ALL THE TOLERANCE FOR TRASH RACK AND EMBEDDED PARTS SHALL CONFIRM TO IS:11388 (LATEST REVISION)
4. ALL SURFACES BETWEEN FIRST STAGE AND 2nd STAGE CONCRETE SHALL BE MADE ROUGH BY CHIPPING, BEFORE CONCRETING 2nd STAGE. SUITABLE DOWEL BARS SHALL BE LEFT IN FIRST STAGE CONCRETE ENSURE PROPER BOND BETWEEN FIRST AND 2nd STAGE CONCRETE.
5. THE SIZE OF BLOCK OUTS SHOWN ARE TENTATIVE.

SALIENT FEATURES		
1	NO. OF OPENING	3 NOS.
2	CLEAR OPENING HEIGHT	4.20 M
3	CLEAR WIDTH	10.8 M (VERTICAL)
4	SILL LEVEL	380.00 M
5	DECK LEVEL	390.80 M
6	FRL	385.50 M
7	MWL	389.30 M
8	TYPE	INCLINED TYPE
9	ANGLE OF INCLINATION	12°
10	CLEANING TYPE	BY TRCM

LEGEND

1ST STAGE CONCRETE (GRADE M-30)

2ND STAGE CONCRETE (GRADE M-35)

FOR TENDER PURPOSE ONLY

REV.	DATE	DRAWN	DESIGNED	CHECKED	APPROVED	SUBJECT OF REVISION
0	19-06-2023	SS	XX	XXX	BSS	

OWNER :

ASSAM POWER GENERATION CORPORATION LTD.

PROJECT :

KARBI-LANGPI MIDDLE-II (3X8 MW)
ASSAM, INDIA

TITLE:

INTAKE TRASH RACK
GENERAL ARRAGEMENT

TRACTEBEL engie

TRACTEBEL Engineering pvt. ltd.

Size	Scale	Sheet	Rev.
A1	AS SHOWN	1 OF 2	0

Project No.	Discipline Code	Serial No.
P.020318	TE-H&M-GAD	9554

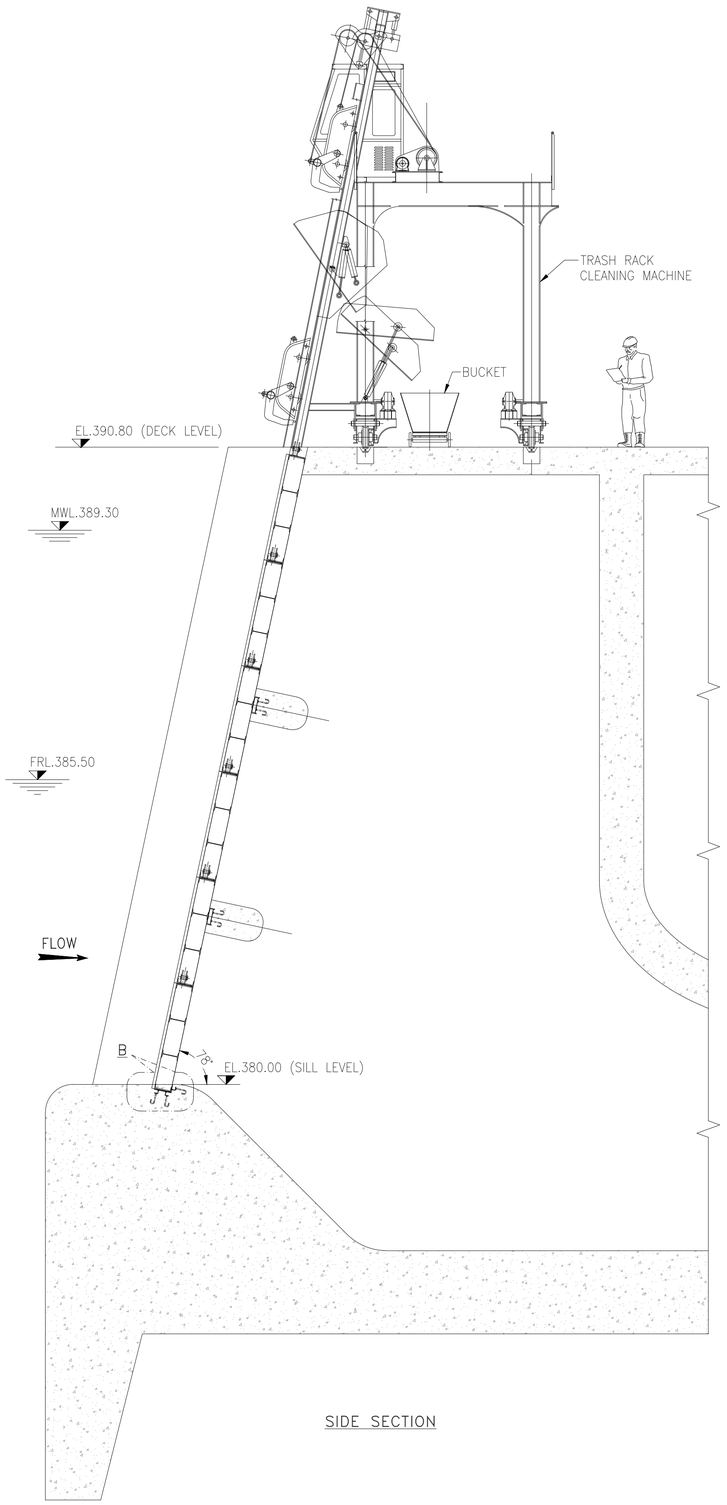

SIDE SECTION

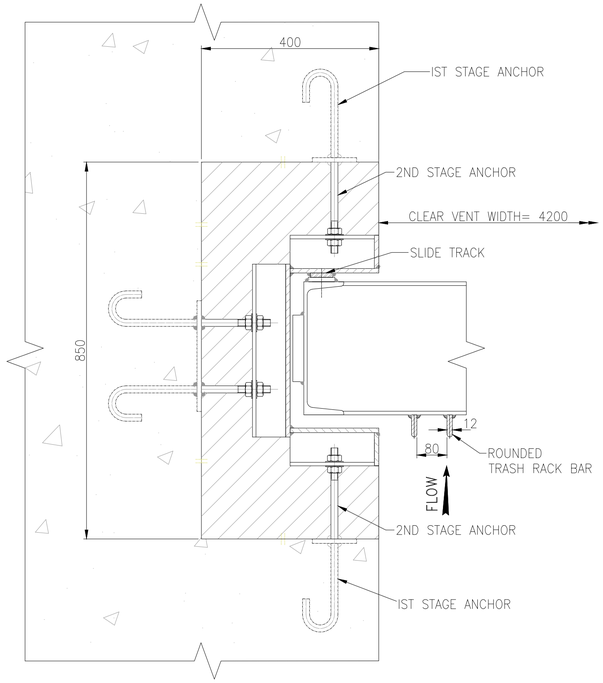

DETAIL–A

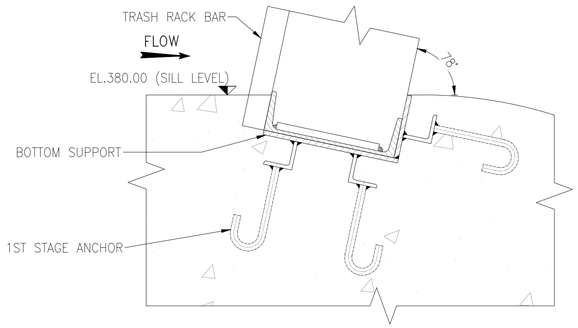

DETAIL–B

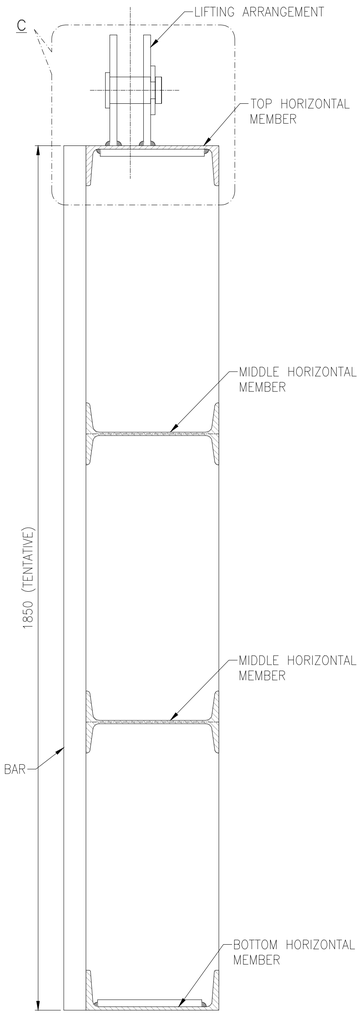

TRASH RACK PANEL

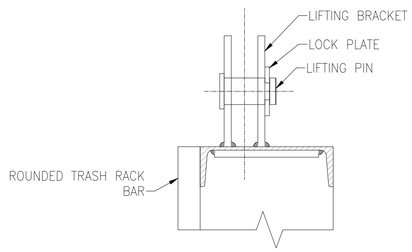

DETAIL–C

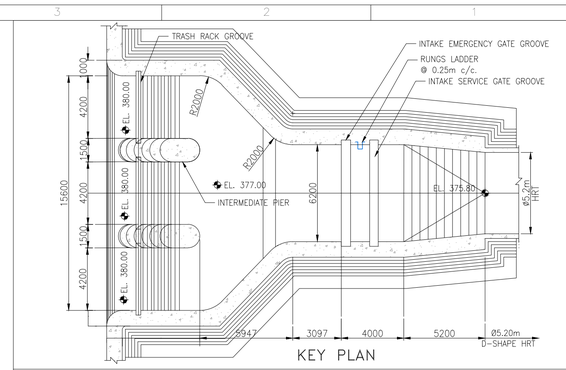

KEY PLAN

NOTES

1. ALL DIMENSIONS ARE IN MILLIMETERS, LEVELS ARE IN METERS.
2. DO NOT MEASURE DIMENSIONS ON THE DRAWING, ONLY WRITTEN DIMENSION SHOULD BE FOLLOWED.
3. ALL THE TOLERANCE FOR TRASH RACK AND EMBEDDED PARTS SHALL CONFIRM TO IS:11388 (LATEST REVISION)
4. ALL SURFACES BETWEEN FIRST STAGE AND 2nd STAGE CONCRETE SHALL BE MADE ROUGH BY CHIPPING, BEFORE CONCRETING 2nd STAGE. SUITABLE DOWEL BARS SHALL BE LEFT IN FIRST STAGE CONCRETE ENSURE PROPER BOND BETWEEN FIRST AND 2nd STAGE CONCRETE.
5. THE SIZE OF BLOCK OUTS SHOWN ARE TENTATIVE.
6. TRASH RACK BAR SPACING SHOWN TENTATIVE SHALL BE CONFIRMED BY EM VENDOR LATER.

LEGEND

1ST STAGE CONCRETE (GRADE M–30)

2ND STAGE CONCRETE (GRADE M–35)

FOR TENDER PURPOSE ONLY

REV.	DATE	DRAWN	DESIGNED	CHECKED	APPROVED	SUBJECT OF REVISION
0	19–06–2023	SS	XX	XXX	BSS	

OWNER : ASSAM POWER GENERATION CORPORATION LTD.

PROJECT : KARBI-LANGPI MIDDLE-II (3X8 MW) ASSAM, INDIA

TITLE: INTAKE TRASH RACK GENERAL ARRAGEMENT

TRACTEBEL engie

TRACTEBEL Engineering pvt. ltd.

Size	Scale	Sheet	Rev.
A1	AS SHOWN	2 OF 2	0

Project No.	Discipline Code	Serial No.
P.020318	TE-H&M-GAD	9554

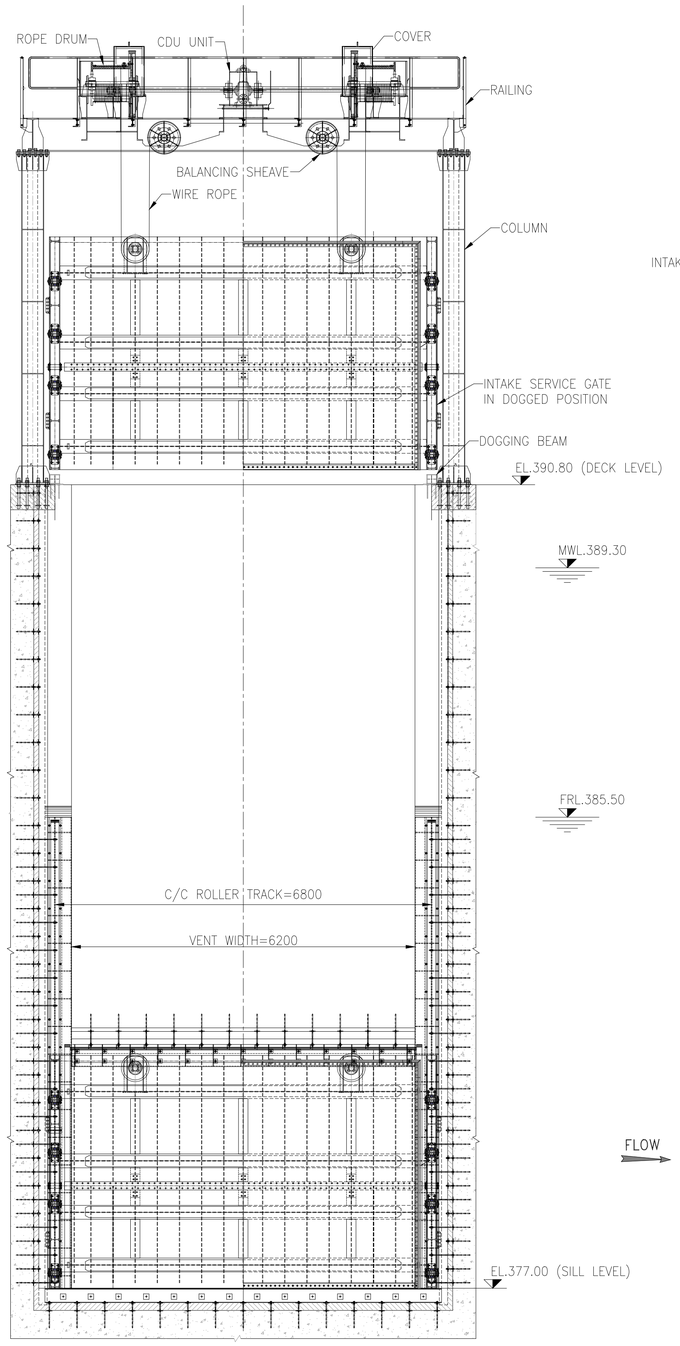

ELEVATION

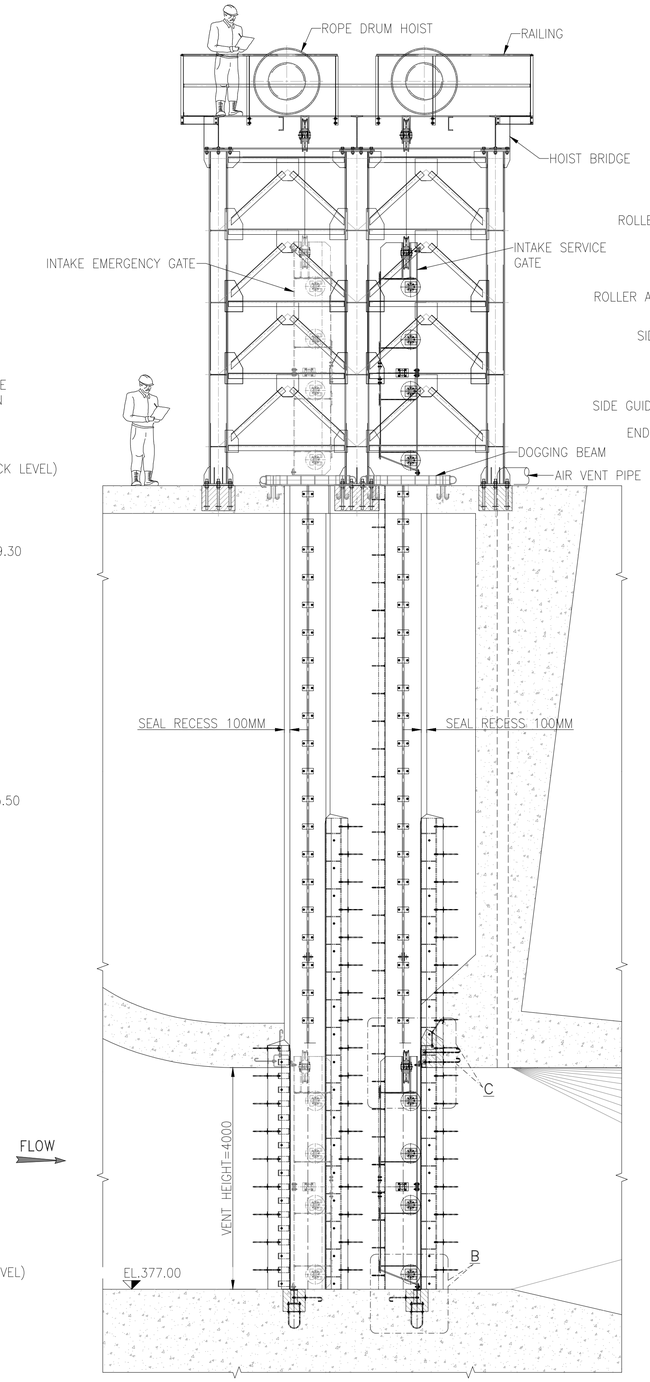

SECTION THROUGH C/L OF BAY

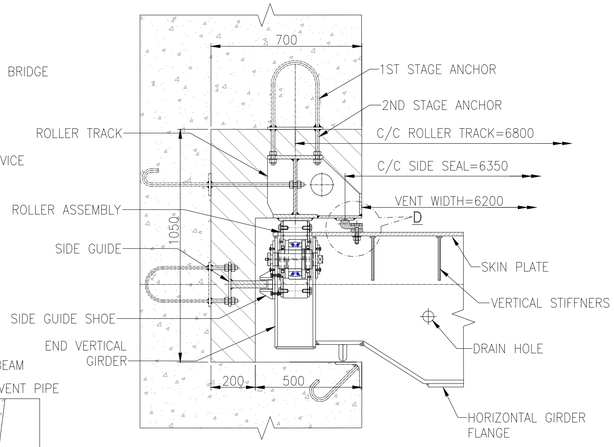

GROOVE DETAIL–A

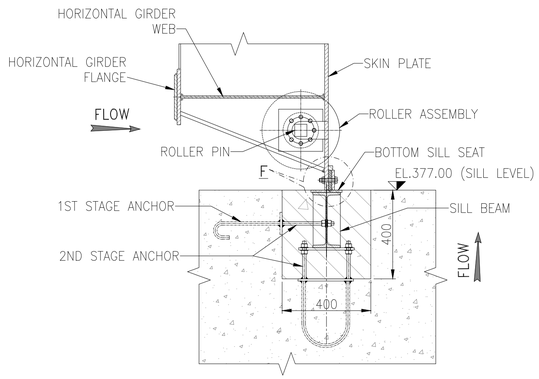

DETAIL–B

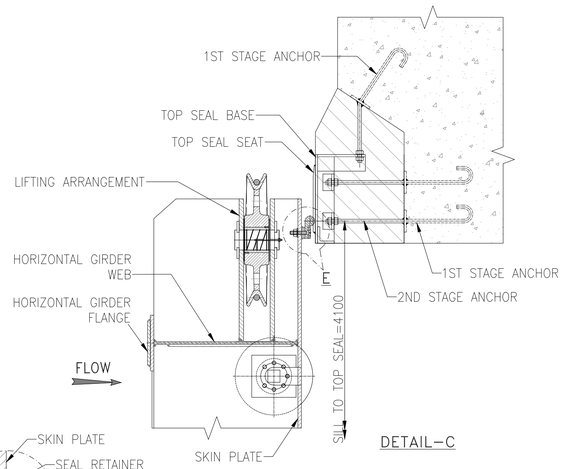

DETAIL–C

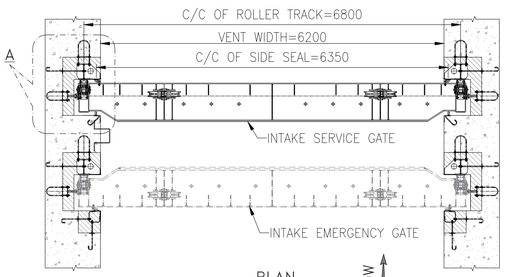

PLAN

FLOW

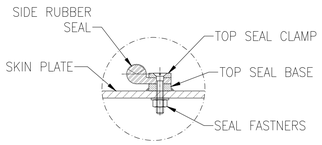

SIDE SEAL DETAIL–D

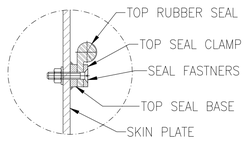

TOP SEAL DETAIL–E

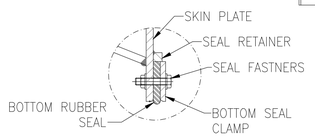

BOTTOM SEAL DETAIL–F

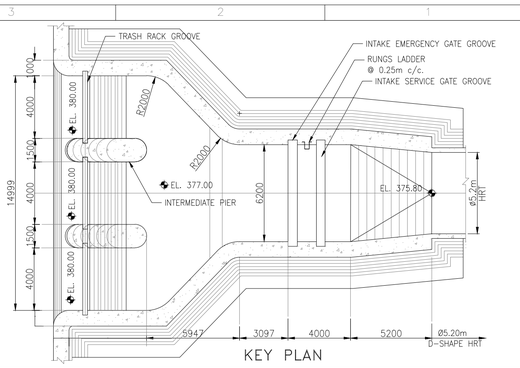

KEY PLAN

NOTES

1. ALL DIMENSIONS ARE IN MILLIMETERS, LEVELS ARE IN METERS.
2. DO NOT MEASURE DIMENSIONS ON THE DRAWING, ONLY WRITTEN DIMENSION SHOULD BE FOLLOWED.
3. ALL THE TOLERANCE FOR GATES AND EMBEDDED PARTS SHALL CONFIRM TO IS:4623 (LATEST REVISION)
4. B.H.N VALUE OF TRACK PLATES SHALL BE KEPT AT LEAST 50 POINTS HIGHER THAN THAT OF ROLLERS.
5. FACES OF TRACKS, SEAL SEATS AND GUIDES SHALL BE IN TRUE PLANE WITHIN THE TOLERANCES AS SPECIFIED IN IS:4622 (LATEST REVISION)
6. SUITABLE REMOVAL GRATING SHALL BE PROVIDED AT EL391.50M
7. ALL SURFACES BETWEEN FIRST STAGE AND 2nd STAGE CONCRETE SHALL BE MADE ROUGH BY CHIPPING, BEFORE CONCRETING 2nd STAGE. SUITABLE DOWEL BARS SHALL BE LEFT IN FIRST STAGE CONCRETE ENSURE PROPER BOND BETWEEN FIRST AND 2nd STAGE CONCRETE.
8. THE SIZE OF BLOCKOUTS ARE TENTATIVE.

SALIENT FEATURES		
1	NO. OF OPENING	1 NOS.
2	CLEAR OPENING HEIGHT	4.00 M
3	CLEAR WIDTH	6.20 M
4	SILL LEVEL	377.00 M
5	DECK LEVEL	390.80 M
6	FRL	385.50 M
7	MWL	389.30 M
8	GATE TYPE	VERTICAL LIFT TYPE
9	LOCATION OF SIDE SEAL & SKIN PLATE	DOWN STREAM
10	OPERATING EQUIPMENT	ROPE DRUM HOIST

LEGEND

1ST STAGE CONCRETE (GRADE M–30)

2ND STAGE CONCRETE (GRADE M–35)

FOR TENDER PURPOSE ONLY

REV.	DATE	DRAWN	DESIGNED	CHECKED	APPROVED	SUBJECT OF REVISION
0	19–06–2023	SS	XX	XXX	BSS	

OWNER :

ASSAM POWER GENERATION CORPORATION LTD.

PROJECT :

KARBI-LANGPI MIDDLE-II (3X8 MW)
ASSAM, INDIA

TITLE:

INTAKE SERVICE GATE
GENERAL ARRAGEMENT

TRACTEBEL Engineering pvt. ltd.

Size	Scale	Sheet	Rev.
A1	AS SHOWN	1 OF 2	0
Project No.		Discipline Code	Serial No.
P.020318		TE-H&M-GAD	9555

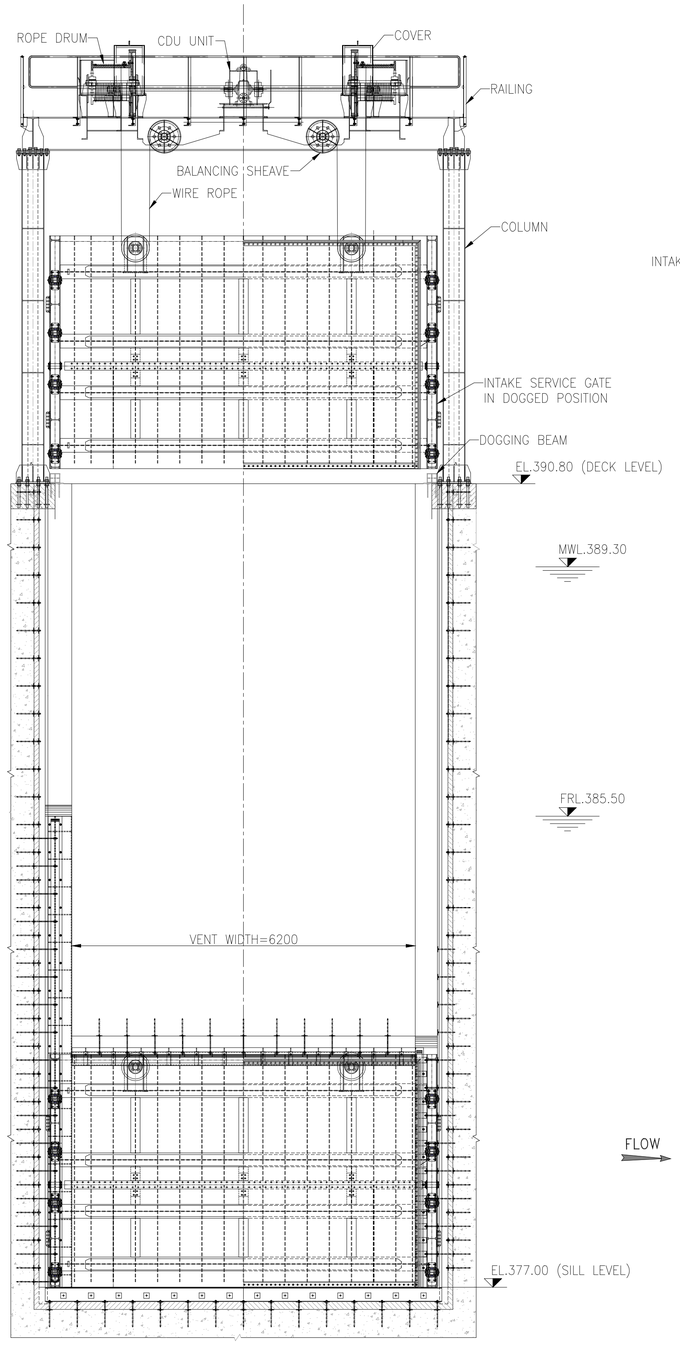

ELEVATION

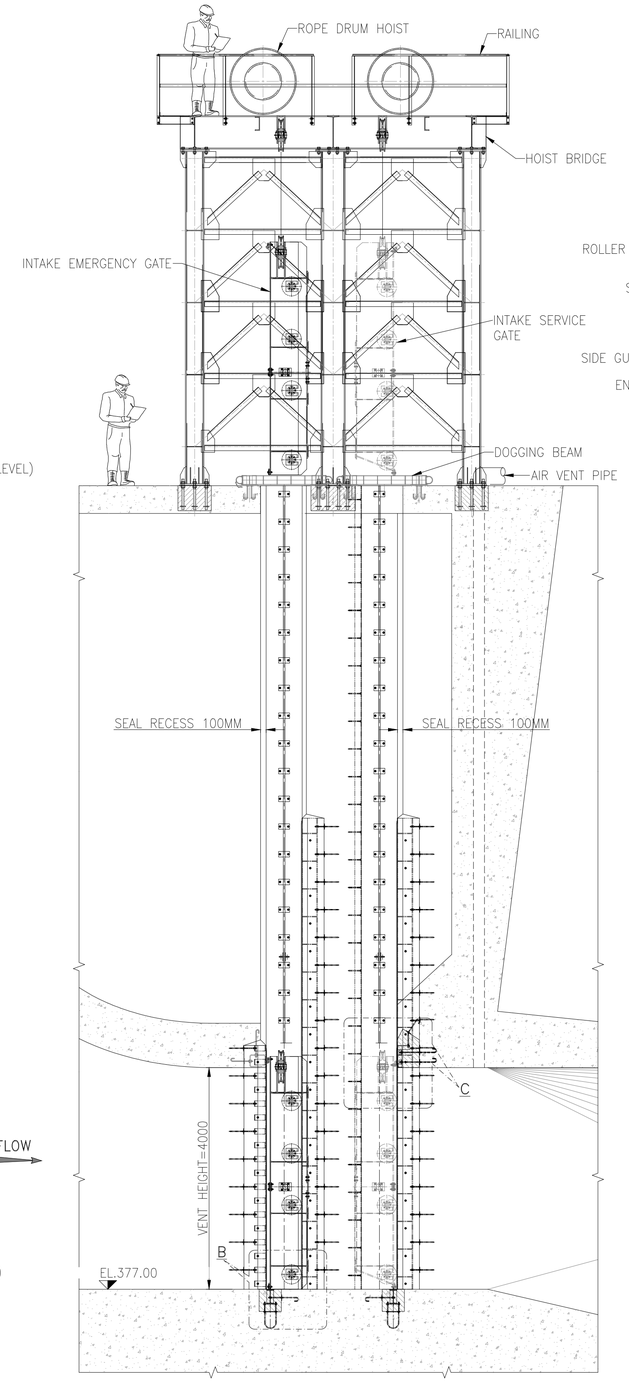

SECTION THROUGH C/L OF BAY

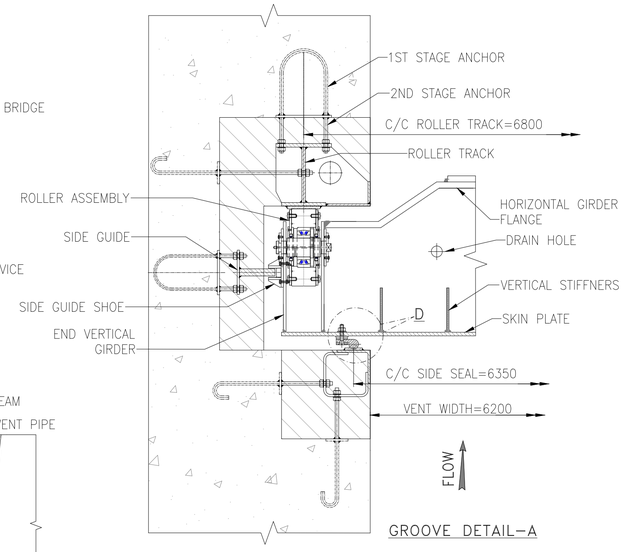

GROOVE DETAIL–A

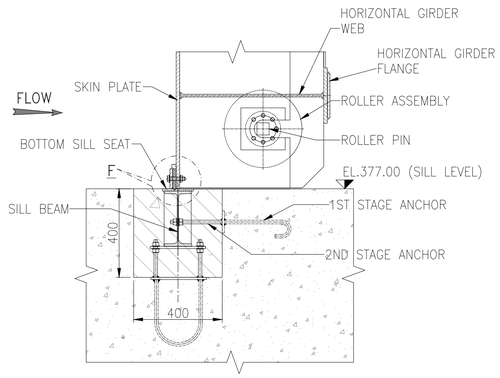

DETAIL–B

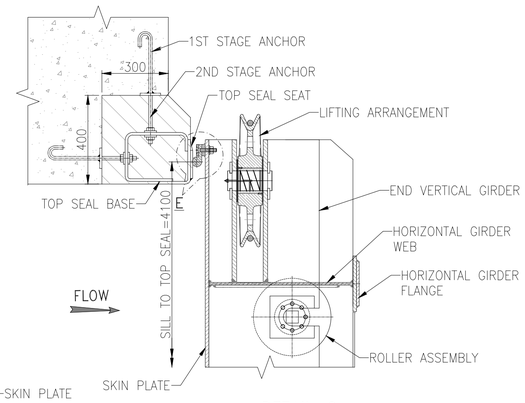

DETAIL–C

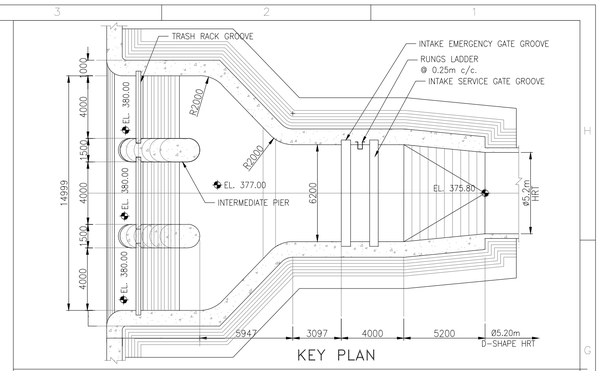

KEY PLAN

NOTES

1. ALL DIMENSIONS ARE IN MILLIMETERS, LEVELS ARE IN METERS.
2. DO NOT MEASURE DIMENSIONS ON THE DRAWING, ONLY WRITTEN DIMENSION SHOULD BE FOLLOWED.
3. ALL THE TOLERANCE FOR GATES AND EMBEDDED PARTS SHALL CONFIRM TO IS:4623 (LATEST REVISION)
4. B.H.N VALUE OF TRACK PLATES SHALL BE KEPT AT LEAST 50 POINTS HIGHER THAN THAT OF ROLLERS.
5. FACES OF TRACKS, SEAL SEATS AND GUIDES SHALL BE IN TRUE PLANE WITHIN THE TOLERANCES AS SPECIFIED IN IS:4622 (LATEST REVISION)
6. SUITABLE REMOVAL GRATING SHALL BE PROVIDED AT EL391.50M
7. ALL SURFACES BETWEEN FIRST STAGE AND 2nd STAGE CONCRETE SHALL BE MADE ROUGH BY CHIPPING, BEFORE CONCRETING 2nd STAGE. SUITABLE DOWEL BARS SHALL BE LEFT IN FIRST STAGE CONCRETE ENSURE PROPER BOND BETWEEN FIRST AND 2nd STAGE CONCRETE.
8. THE SIZE OF BLOCKOUTS ARE TENTATIVE.

SALIENT FEATURES		
1	NO. OF OPENING	1 NOS.
2	CLEAR OPENING HEIGHT	4.00 M
3	CLEAR WIDTH	6.20 M
4	SILL LEVEL	377.00 M
5	DECK LEVEL	390.80 M
6	FRL	385.50 M
7	MWL	389.30 M
8	GATE TYPE	VERTICAL LIFT TYPE
9	LOCATION OF SIDE SEAL & SKIN PLATE	UPSTREAM
10	OPERATING EQUIPMENT	ROPE DRUM HOIST

LEGEND

1ST STAGE CONCRETE (GRADE M–30)

2ND STAGE CONCRETE (GRADE M–35)

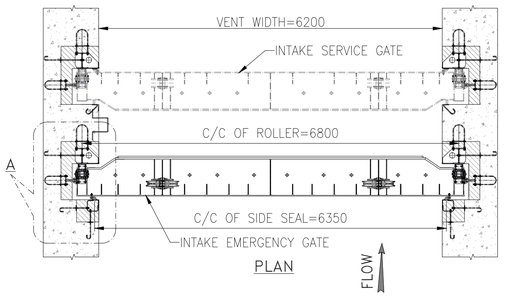

PLAN

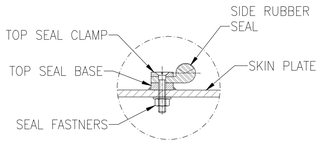

SIDE SEAL DETAIL–D

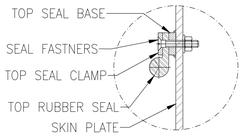

TOP SEAL DETAIL–E

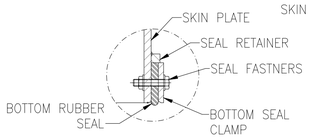

BOTTOM SEAL DETAIL–F

FOR TENDER PURPOSE ONLY

REV.	DATE	DRAWN	DESIGNED	CHECKED	APPROVED	SUBJECT OF REVISION
0	19-06-2023	SS	XX	XXX	BSS	

OWNER : ASSAM POWER GENERATION CORPORATION LTD.

PROJECT : KARBI-LANGPI MIDDLE-II (3X8 MW) ASSAM, INDIA

TITLE: INTAKE EMERGENCY GATE GENERAL ARRAGEMENT

TRACTEBEL ENGIE

TRACTEBEL Engineering pvt. ltd.

Size	Scale	Sheet	Rev.
A1	AS SHOWN	1 OF 1	0

Project No.	Discipline Code	Serial No.
P.020318	TE-H&M-GAD	9556

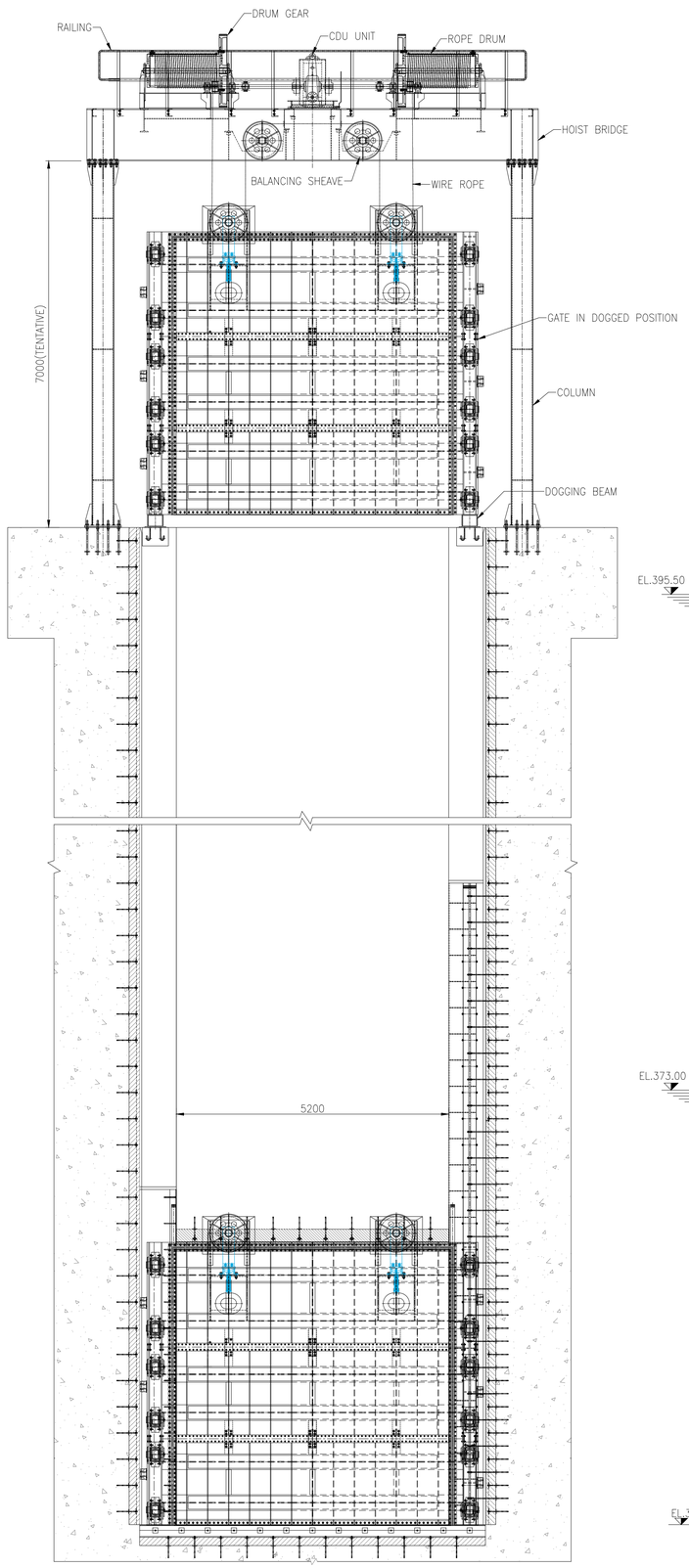

ELEVATION

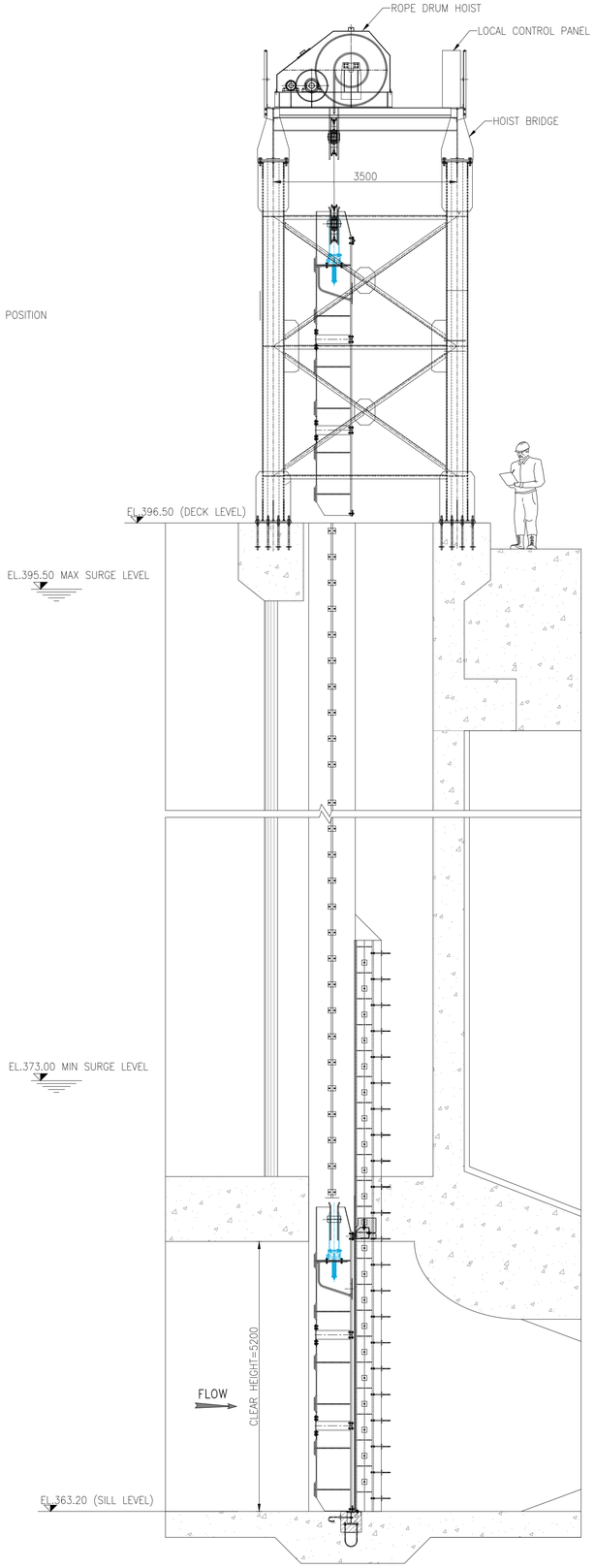

SECTION THROUGH C/L OF BAY

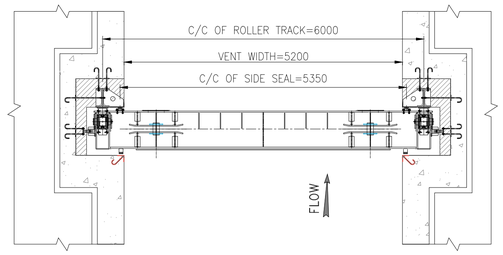

SECTIONAL PLAN

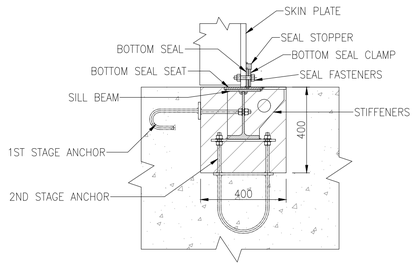

DETAIL-A
SILL BEAM DETAIL

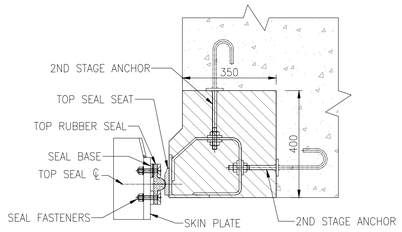

DETAIL-B

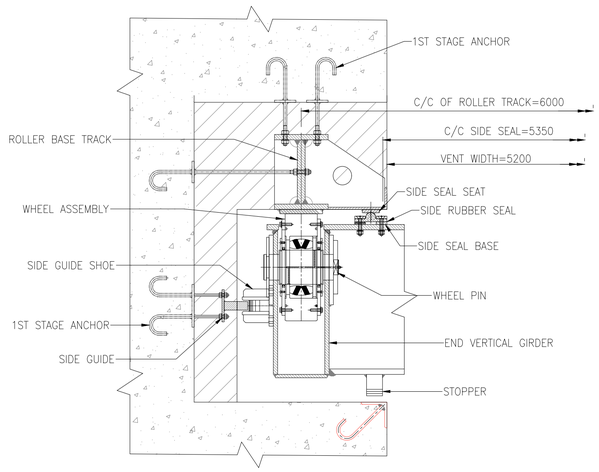

DETAIL-C

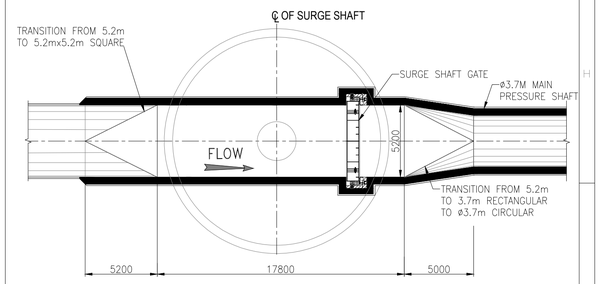

KEY PLAN

NOTES

1. ALL DIMENSIONS ARE IN MILLIMETERS, LEVELS ARE IN METERS.
2. DO NOT MEASURE DIMENSIONS ON THE DRAWING, ONLY WRITTEN DIMENSION SHOULD BE FOLLOWED.
3. ALL THE TOLERANCE FOR GATES AND EMBEDDED PARTS SHALL CONFIRM TO IS:4623 (LATEST REVISION)
4. B.H.N VALUE OF TRACK PLATES SHALL BE KEPT AT LEAST 50 POINTS HIGHER THAN THAT OF ROLLERS.
5. FACES OF TRACKS, SEAL SEATS AND GUIDES SHALL BE IN TRUE PLANE WITHIN THE TOLERANCES AS SPECIFIED IN IS:4622 (LATEST REVISION)
6. SUITABLE REMOVAL GRATING SHALL BE PROVIDED AT EL391.50M
7. ALL SURFACES BETWEEN FIRST STAGE AND 2nd STAGE CONCRETE SHALL BE MADE ROUGH BY CHIPPING, BEFORE CONCRETING 2nd STAGE. SUITABLE DOWEL BARS SHALL BE LEFT IN FIRST STAGE CONCRETE ENSURE PROPER BOND BETWEEN FIRST AND 2nd STAGE CONCRETE.
8. THE SIZE OF BLOCKOUTS ARE TENTATIVE.

SALIENT FEATURES		
1	NO. OF OPENING	1 NOS.
2	CLEAR OPENING HEIGHT	5.20 M
3	CLEAR WIDTH	5.20 M
4	SILL LEVEL	363.20 M
5	DECK LEVEL	396.50 M
6	MAX. SURGE LEVEL	395.50 M
7	MIN. SURGE LEVEL	373.00 M
8	GATE TYPE	VERTICAL LIFT TYPE
9	LOCATION OF SIDE SEAL & SKIN PLATE	DOWNSTREAM
10	OPERATING EQUIPMENT	ROPE DRUM HOIST

LEGEND

1ST STAGE CONCRETE (GRADE M-30)

2ND STAGE CONCRETE (GRADE M-35)

FOR TENDER PURPOSE ONLY

REV.	DATE	DRAWN	DESIGNED	CHECKED	APPROVED	SUBJECT OF REVISION
0	19-06-2023	SS	XX	XXX	BSS	

OWNER :

ASSAM POWER GENERATION CORPORATION LTD.

PROJECT :

KARBI-LANGPI MIDDLE-II (3X8 MW)
ASSAM, INDIA

TITLE:

SURGE SHAFT GATE
GENERAL ARRAGEMENT

TRACTEBEL engie

TRACTEBEL Engineering pvt. ltd.

Size	Scale	Sheet	Rev.
A1	AS SHOWN	1 OF 1	0

Project No.	Discipline Code	Serial No.
P.020318	TE-H&M-GAD	9557

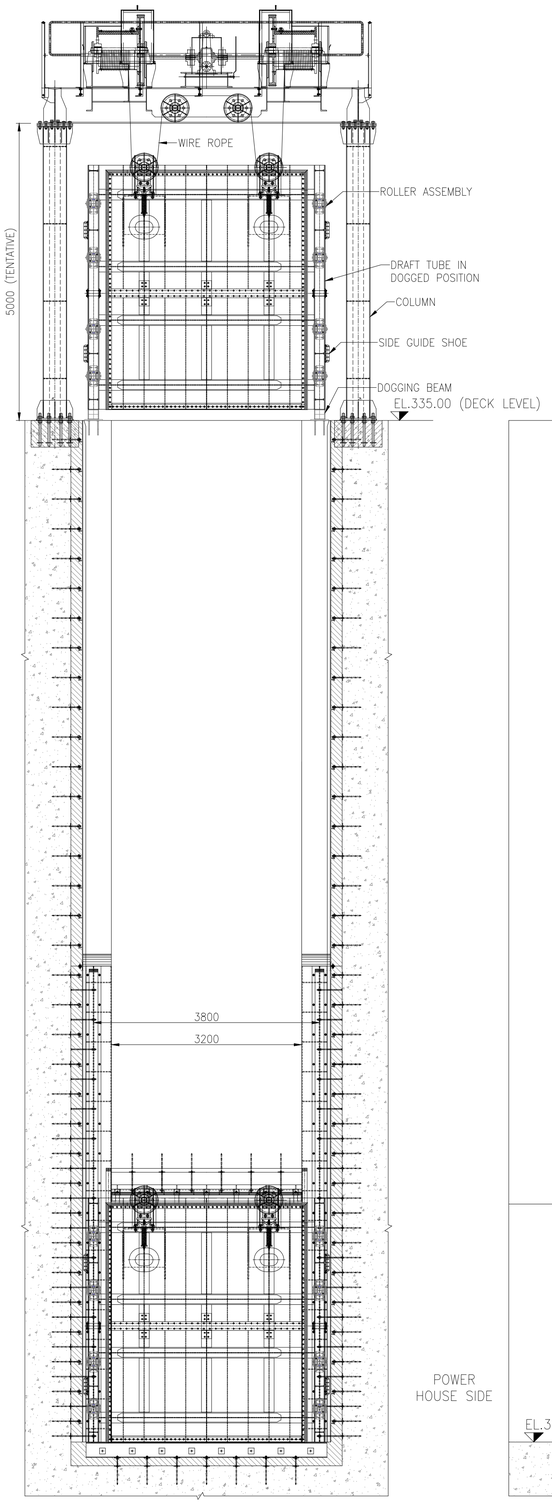

ELEVATION

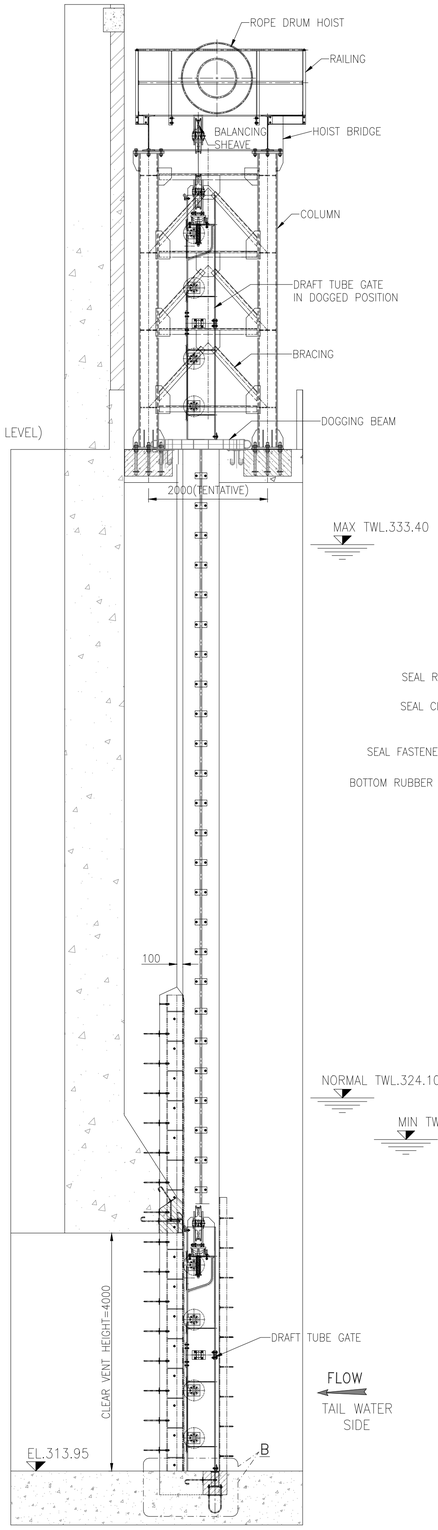

SECTION THROUGH C/L OF BAY

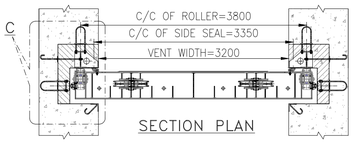

SECTION PLAN

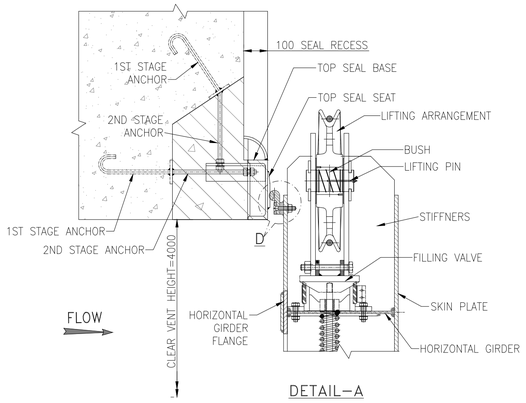

DETAIL–A

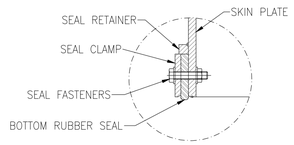

DETAIL–E

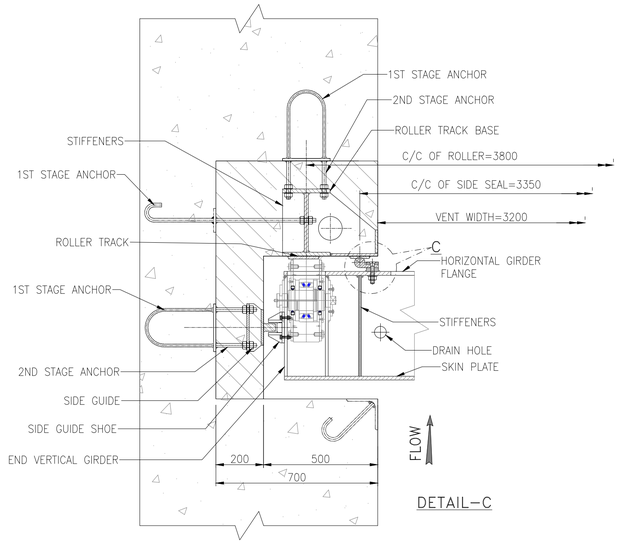

DETAIL–C

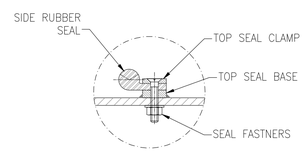

DETAIL–C

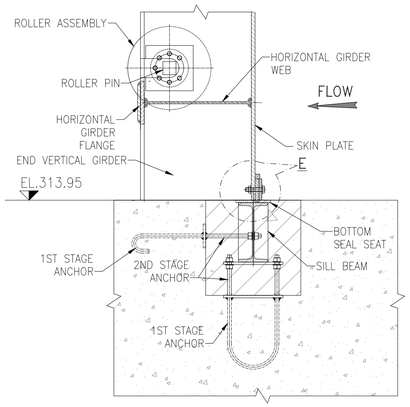

DETAIL–B

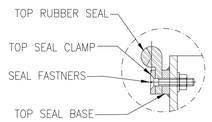

DETAIL–D

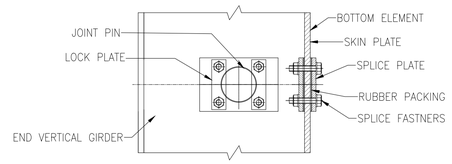

SEMI FLEXIBLE GATE JOINT DETAIL

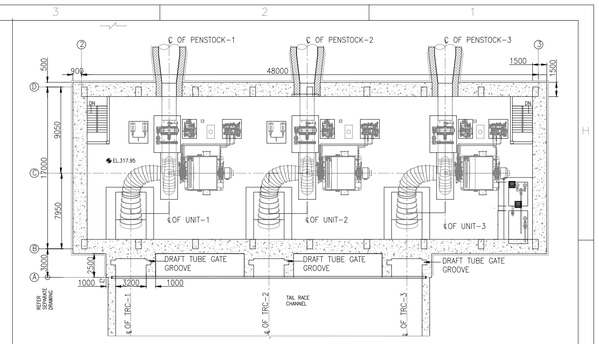

KEY PLAN

NOTES

1. ALL DIMENSIONS ARE IN MILLIMETERS, LEVELS ARE IN METERS.
2. DO NOT MEASURE DIMENSIONS ON THE DRAWING, ONLY WRITTEN DIMENSION SHOULD BE FOLLOWED.
3. ALL THE TOLERANCE FOR GATES AND EMBEDDED PARTS SHALL CONFIRM TO IS:4623 (LATEST REVISION)
4. B.H.N VALUE OF TRACK PLATES SHALL BE KEPT AT LEAST 50 POINTS HIGHER THAN THAT OF ROLLERS.
5. FACES OF TRACKS, SEAL SEATS AND GUIDES SHALL BE IN TRUE PLANE WITHIN THE TOLERANCES AS SPECIFIED IN IS:4622 (LATEST REVISION)
6. SUITABLE REMOVAL GRATING SHALL BE PROVIDED AT EL391.50M
7. ALL SURFACES BETWEEN FIRST STAGE AND 2nd STAGE CONCRETE SHALL BE MADE ROUGH BY CHIPPING, BEFORE CONCRETING 2nd STAGE. SUITABLE DOWEL BARS SHALL BE LEFT IN FIRST STAGE CONCRETE ENSURE PROPER BOND BETWEEN FIRST AND 2nd STAGE CONCRETE.
8. THE SIZE OF BLOCKOUTS ARE TENTATIVE.

SALIENT FEATURES		
1	NO. OF OPENING	3 NOS.
2	CLEAR OPENING HEIGHT	4.00 M
3	CLEAR WIDTH	3.20 M
4	SILL LEVEL	313.95 M
5	DECK LEVEL	335.00 M
6	MAX. TWL	333.40 M
7	MIN. TWL	323.40 M
8	GATE TYPE	VERTICAL LIFT TYPE
9	LOCATION OF SKIN PLATE	UPSTREAM (TRT SIDE)
9a	LOCATION OF SEAL	DOWNSTREAM (PH SIDE)
10	OPERATING EQUIPMENT	ROPE DRUM HOIST

LEGEND

1ST STAGE CONCRETE (GRADE M–30)

2ND STAGE CONCRETE (GRADE M–35)

FOR TENDER PURPOSE ONLY

REV.	DATE	DRAWN	DESIGNED	CHECKED	APPROVED	SUBJECT OF REVISION
0	19–06–2023	SS	XX	XXX	BSS	

OWNER : ASSAM POWER GENERATION CORPORATION LTD.

PROJECT : KARBI-LANGPI MIDDLE-II (3X8 MW) ASSAM, INDIA

TITLE: DRAFT TUBE GATE GENERAL ARRAGEMENT

TRACTEBEL Engineering pvt. ltd.

Size	Scale	Sheet	Rev.
A1	AS SHOWN	1 OF 1	0

Project No.	Discipline Code	Serial No.
P.020318	TE-H&M-GAD	9558

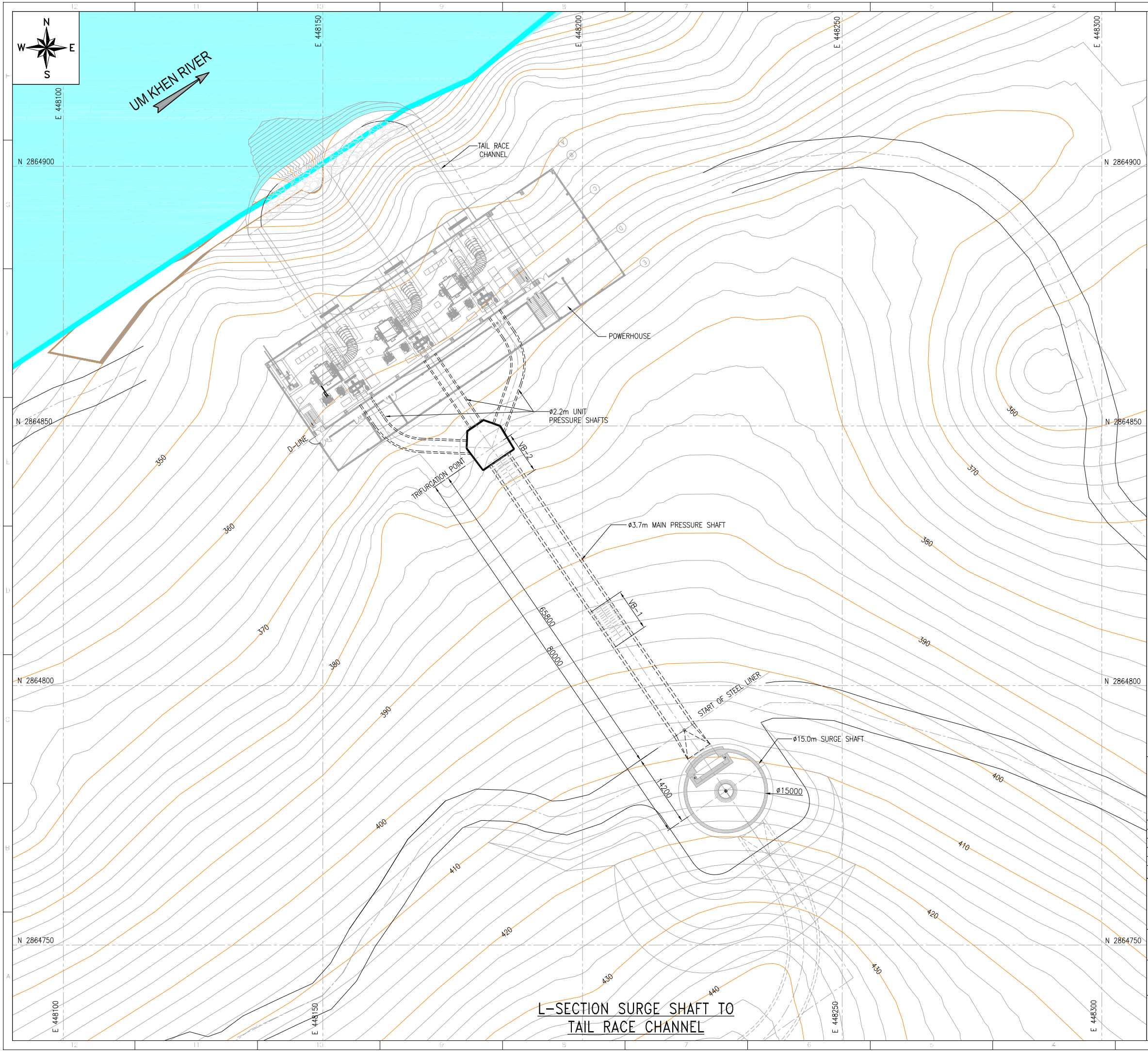

L-SECTION SURGE SHAFT TO TAIL RACE CHANNEL

NOTES:-

1. ALL DIMENSIONS ARE IN MILLIMETERS AND ELEVATIONS IN METERS, UNLESS OTHERWISE SPECIFIED.
2. DO NOT MEASURE DIMENSIONS ON THE DRAWING, ONLY WRITTEN DIMENSION SHOULD BE FOLLOWED.
3. THIS DRAWING IS FOR REFERENCE QUANTITY PURPOSE ONLY.

0 35.0 87.5 175.0 350.0M

REV.	DATE	DRAWN	DESIGNED	CHECKED	APPROVED	SUBJECT OF REVISION
0	08-12-2023	XX	XX	XXX	BSS	FOR APPROVAL

OWNER :

ASSAM POWER GENERATION CORPORATION LTD.

PROJECT :

KARBI-LANGPI MIDDLE-II (3X8 MW)
ASSAM, INDIA

TITLE:

PRESSURE SHAFT
GENERAL ARRANGEMENT

TRACTEBEL engie

TRACTEBEL Engineering pvt. ltd.

Size	Scale	Sheet	Rev.
A1	AS SHOWN	1 OF 2	0

Project No.	Discipline Code	System Code	Serial No.
P.020318	TE-H&M-GAD		9559

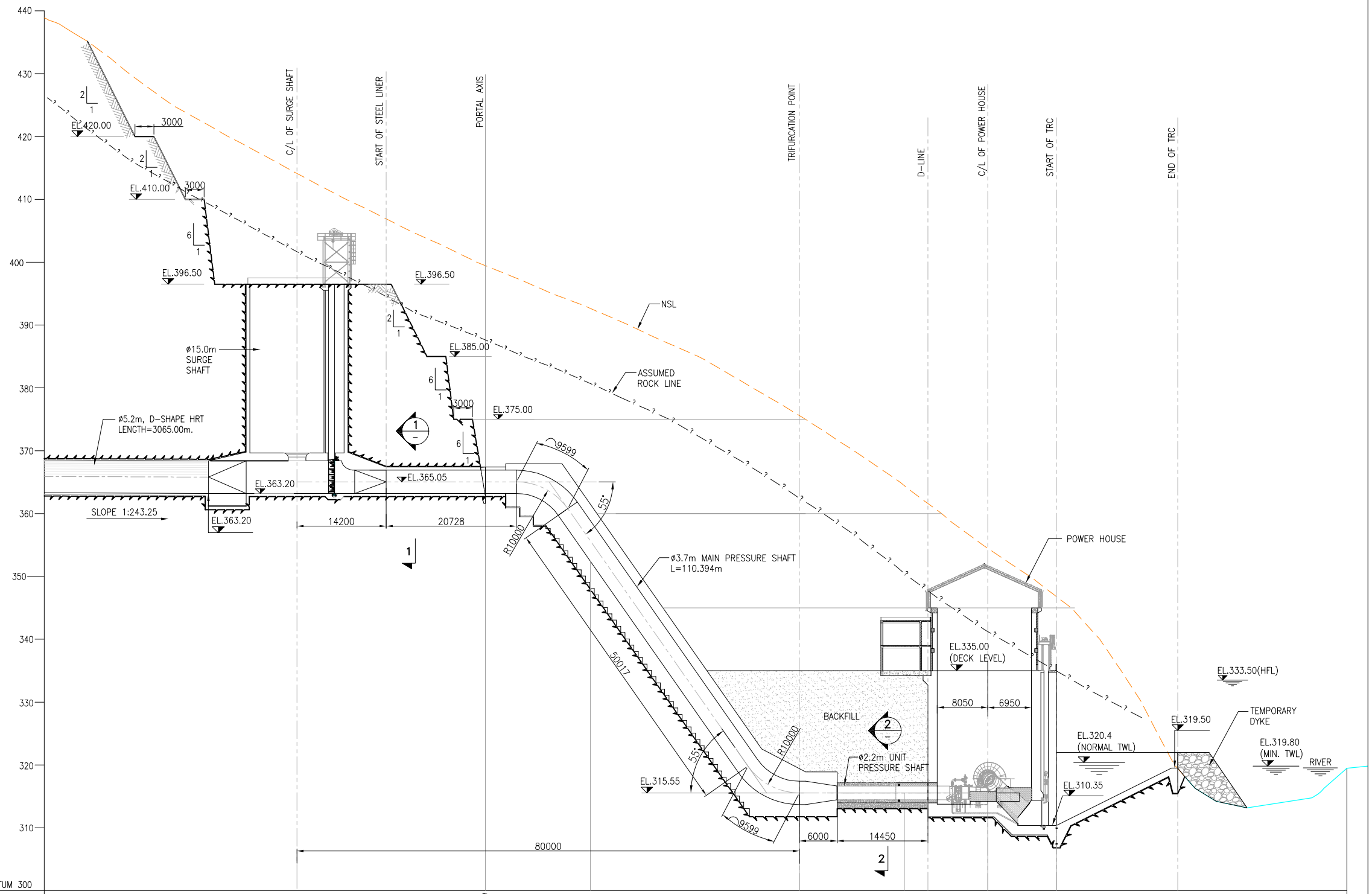

CHAINAGE (m)		3103.279		3133.279	3150	3183.279	3200	3213.279	3224.229	3243.53
CENTER LINE EL. FOR SS,PS & PENSTOCK	362.877	364.727	355.643	315.55	315.55	317.799	310.35	319.50
NSL	413.805	399.123	392.643	375.586	364.431	354.478	346.761	319.400

L-SECTION SURGE SHAFT TO TAIL RACE CHANNEL

SCALE 1:150

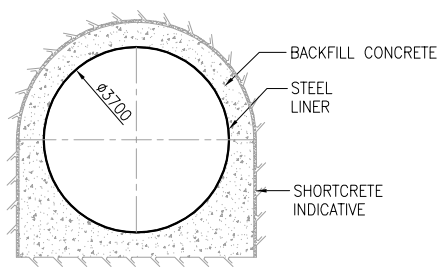

SECTION 1-1

(SCALE 1:75)

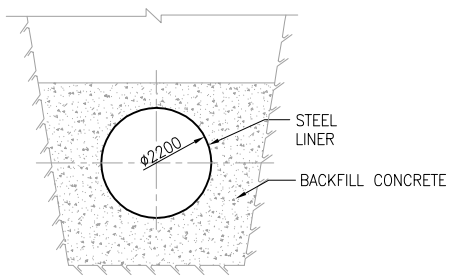

SECTION 2-2

(SCALE 1:75)

NOTES:-

1. ALL DIMENSIONS ARE IN MILLIMETERS AND ELEVATIONS IN METERS, UNLESS OTHERWISE SPECIFIED.
2. DO NOT MEASURE DIMENSIONS ON THE DRAWING, ONLY WRITTEN DIMENSION SHOULD BE FOLLOWED.
3. THIS DRAWING IS FOR REFERENCE PURPOSE ONLY.

0 1.50 3.75 7.50 15.0M

REV.	DATE	DRAWN	DESIGNED	CHECKED	APPROVED	SUBJECT OF REVISION
0	08-12-2023	XX	XX	XXX	BSS	FOR APPROVAL

OWNER :

ASSAM POWER GENERATION CORPORATION LTD.

PROJECT :

KARBI-LANGPI MIDDLE-II (3X8 MW)
ASSAM, INDIA

TITLE:

PRESSURE SHAFT
GENERAL ARRANGEMENT

TRACTEBEL engie

TRACTEBEL Engineering pvt. ltd.

Size	Scale	Sheet	Rev.
A1	AS SHOWN	2 OF 2	0

Project No.	Discipline Code	System Code	Serial No.
P.020318	TE-H&M-GAD		9559